400kV BUS REACTOR
CONTROL & PROTN. PANEL (BAY-402)

LIST OF DOCUMENTS

DRAWING	DESCRIPTION.	REVISION	DATE	ISSUE
I1-226736082-GL-02	GENERAL ARRANGEMENT & LEGEND	Z	21-04-2025	AS MANUFACTURED
I1-226736082-S-02	SCHEMATIC DRAWINGS	Z	21-04-2025	AS MANUFACTURED

REFERENCE DIAGRAMS:

S.NO	DESCRIPTION	DRAWING NO	REVISION & DATE
1	SINGLE LINE DIAGRAM	TE00520-V004-00-E-E4-001	REV D & DATE:29.07.2024
2	C02_BUS REACTOR LCC SCHEMATIC DRAWING	(3)-G71770-AD715-S005-U201	REV 02 & DATE:21.03.2025

PANEL TYPE: +402BRA,+402BRB

PO. NO & DATE: 6100001138 DATED: 28.04.2024

CLIENT : JALPURA KHURJA POWER TRANSMISSION LIMITED (JKPTL)
(The Tata Power Company Limited)

PROJECT :
CONSTRUCTION OF 400/220kV , 2x500 MVA GIS SUBSTATION METRO DEPOT (GR. NOIDA) WITH ASSOCIATED LINE AND 400/220 kV, 2x500 MVA GIS SUBSTATION JALPURA WITH ASSOCIATED LINES

TITLE : SUPPLY OF CRP & SAS AT 400/220kV METRO DEPOT GIS

CONTRACTOR : BAJEL PROJECTS LIMITED

VENDOR : Schneider Electric

DRAWN : BG		
CHECKED : BG		DATE : 21-04-2025
SCALE : 1:1		DATE : 21-04-2025
REVIEWED : RKK	DWG NO: TE00520-V004-00-E11-E15-003	REV : Z

This document is the exclusive property of Schneider Electric and shall not be used, copied or communicated to third parties without prior authorization.

▲ SHEET	DESCRIPTION
00	COVER SHEET
000	INDEX SHEET
001	GENERAL ARRANGEMENT: +402BRA
002	BILL OF MATERIAL : +402BRA
003	BILL OF MATERIAL : +402BRA
004	BILL OF MATERIAL : +402BRA
005	GENERAL ARRANGEMENT: 402BRB
006	BILL OF MATERIAL : 402BRB
007	BILL OF MATERIAL : 402BRB
008	BILL OF MATERIAL : 402BRB

This document is the exclusive property of Schneider Electric and shall not be used, copied or communicated to third parties without prior authorization.

CUSTOMER : JALPURA KHURJA POWER TRANSMISSION LTD.
(THE TATA POWER COMPANY LTD.)
PROJECT : SUPPLY OF CRP & SAS AT 400/220kV METRO DEPOT GIS

PO. No.& Date : 6100001138 DATED: 28.04.2024

CONTRACTOR : BAJEL PROJECTS LIMITED

Schneider Electric

TITLE : 400kV BUS REACTOR
CONTROL & PROTN. PANEL (BAY-402)
INDEX SHEET

PANEL TYPE : +402BRA,+402BRB

PREPARED : BG
REVIEWED : BG
APPROVED : RKK

REVISION: Z
DATE: 21-04-2025

SHT : 000
CONT: 001

DRG. NO.: I1-226736082-GL-02

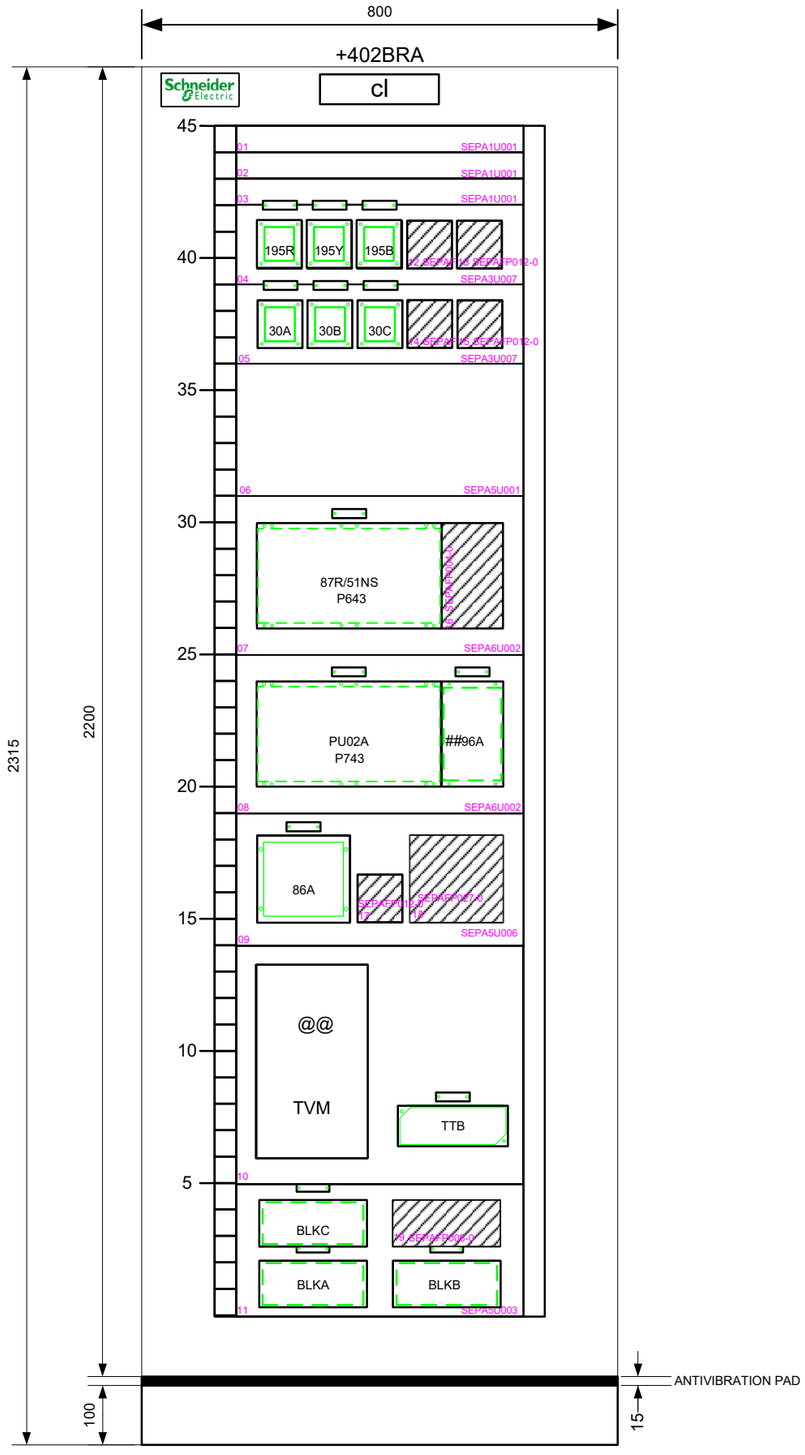

Designation	Material	Description
01	SEPA1U001	1U-BLANKING PLATE
02	SEPA1U001	1U-BLANKING PLATE
03	SEPA1U001	1U-BLANKING PLATE
04	SEPA3U007	3U-5NO'S OF 75x80 SIZE SE RELAY
05	SEPA3U007	3U-5NO'S OF 75x80 SIZE SE RELAY
06	SEPA5U001	5U-BLANKING PLATE
07	SEPA6U002	6U-STANDARD MIDOS/MICOM/EASUN REALY PLATE
08	SEPA6U002	6U-STANDARD MIDOS/MICOM/EASUN REALY PLATE
09	SEPA5U006	5U-2NO'S OF 16 C/O & 1NO OF 75x80 SIZE SE RELAY
10	SEPA9U010	9U PLATE WITH CUTOUT FOR 1No TVM ER300P METER & 1No TTB
11	SEPA5U003	5U-4NO'S OF NELSTER/MPG BLK
12	SEPAFP012-0	FP-75X80 - SCHNEIDER
13	SEPAFP012-0	FP-75X80 - SCHNEIDER
14	SEPAFP012-0	FP-75X80 - SCHNEIDER
15	SEPAFP012-0	FP-75X80 - SCHNEIDER
16	SEPAFP004-0	FP-SIZE:4
17	SEPAFP012-0	FP-75X80 - SCHNEIDER
18	SEPAFP027-0	FP-MASTER TRIP RELAY BAXBH16
19	SEPAFP008-0	FP-BLK

NOTE:
1) @@ TVM NOT IN SCHNEIDER SCOPE OF SUPPLY. ONLY CUTOUT AND WIRING IN SCHNEIDER SCOPE.
2) ##96A TRIP RELAYS NOT IN SEIL SCOPE OF SUPPLY

CUSTOMER : JALPURA KHURJA POWER TRANSMISSION LTD.

PROJECT : SUPPLY OF CRP & SAS AT 400/220kV METRO DEPOT GIS

PO. No.& Date : 6100001138 DATED: 28.04.2024

CONTRACTOR : BAJEL PROJECTS LIMITED

Schneider Electric

TITLE : 400kV BUS REACTOR
CONTROL & PROTN. PANEL (BAY-402)
GENERAL ARRANGEMENT: +402BRA
FRONT VIEW

PREPARED : BG
REVIEWED : BG
APPROVED : RKK
REVISION: Z
DATE: 21-04-2025
SHT :001
CONT: 002

DRG. NO.: I1-226736082-GL-02

This document is the exclusive property of Schneider Electric and shall not be used, copied or communicated to third parties without prior authorization.

FRONT VIEW EQUIPMENTS

▲ SL.NO	PANEL	DESIGNATION	MATERIAL	MANUFACTURER	DESCRIPTION	COMMENT/LABEL LINE-02
001	+402BRA	87R/51NS	P64332QDGM0B78M	SCHNEIDER ELECTRIC	REACTOR DIFF. PROTN.RELAY, AUX VOTL: 110-250V DC/100-240V AC, INOM:1A/5A, VNOM:100-120V AC, OPTO I/P: 24, O/P CONTACT: 16, PROTOCOL: IEC61850 COURIER (K-BUS), COMMUNICATION PORT:2LC+RJ45 PORT CASE: 60TE, MOUNTING: PANEL	DIFF/SEF PROTN. RLY.
002	+402BRA	PU02A	P743311A1M0B18M	SCHNEIDER ELECTRIC	BUSBAR PROTN. PERIPHERAL UNIT., AUX VOTL: 110V-250V DC/100-240V AC, INOM:1A/5A, OPTO I/P: 24, O/P CONTACT: 16, PROTOCOL: COURIER (K-BUS) CASE: 60TE, MOUNTING: PANEL. (850nm MULTIMODE FO WITH ST CONNECTOR FOR CONNECTION BETWEEN PU & CU)(PATCH CABLE)	PERIPHERAL UNIT
003	+402BRA	30A	GBINSERAAS4F220	SCHNEIDER ELECTRIC	CONTACT MULTIPLICATION RELAY, 4 C/O, SELF RESET CONTACTS WITH HAND RESET FLAG, 220V DC (+10-20% OF UN) ,FLUSH MOUNTING.	BUCHHOLZ TRIP
004	+402BRA	30B	GBINSERAAS4F220	SCHNEIDER ELECTRIC	CONTACT MULTIPLICATION RELAY, 4 C/O, SELF RESET CONTACTS WITH HAND RESET FLAG, 220V DC (+10-20% OF UN) ,FLUSH MOUNTING.	WTI TRIP
005	+402BRA	30C	GBINSERAAS4F220	SCHNEIDER ELECTRIC	CONTACT MULTIPLICATION RELAY, 4 C/O, SELF RESET CONTACTS WITH HAND RESET FLAG, 220V DC (+10-20% OF UN) ,FLUSH MOUNTING.	SPR TRIP
006	+402BRA	86A	GBINSEBAXBH16220	SCHNEIDER ELECTRIC	ELECTRICAL & HAND RESET TRIP RELAY, 16 C/O, ELECTRICAL & HAND RESET CONTACTS WITH FOLLOWING FLAG, 220V DC (+10-20% OF UN), FLUSH MOUNTING	MASTER TRIP RLY.
007	+402BRA	96A ##	ADE-TX24-14HB4GXX	ASHIDA	ELECTRICAL RESET TRIP RELAY, 16M4B ER : FLAG-YES : 220V DC: CASE SIZE:E4 (CUSTOMER SCOPE OF SUPPLY)	BB/LBB TRIP RLY.
008	+402BRA	195R	GBINSEVD3X220	SCHNEIDER ELECTRIC	TRIP CIRCUIT SUPERVISION RELAY, 2 C/O, SELF RESET CONTACTS WITH LED INDICATION, 220V DC (+10-20% OF UN) ,DROP OUT TIME: >200MS, FLUSH MOUNTING.	TC-1 R-PH SUPVN.
009	+402BRA	195Y	GBINSEVD3X220	SCHNEIDER ELECTRIC	TRIP CIRCUIT SUPERVISION RELAY, 2 C/O, SELF RESET CONTACTS WITH LED INDICATION, 220V DC (+10-20% OF UN) ,DROP OUT TIME: >200MS, FLUSH MOUNTING.	TC-1 Y-PH SUPVN.
010	+402BRA	195B	GBINSEVD3X220	SCHNEIDER ELECTRIC	TRIP CIRCUIT SUPERVISION RELAY, 2 C/O, SELF RESET CONTACTS WITH LED INDICATION, 220V DC (+10-20% OF UN) ,DROP OUT TIME: >200MS, FLUSH MOUNTING.	TC-1 B-PH SUPVN.
011	+402BRA	TVM @@	-	L&T	STATIC ENERGY METER, MODEL: ER300P PROJECTION MOUNTING, 3PH 3ELEMENT 4 WIRE, CL: 0.2, CTR: 3000-2000-1000/1A, PTR: 400KV/110V, MDI: 30MIN, COMM: MODBUS VIA RS485 :WITH ABT . (CUSTOMER SCOPE OF SUPPLY)	TRI VECTOR METER
012	+402BRA	BLKA	GBRLYTESTBLKNEL	NELSTER	TEST BLOCK, 10 CONTACT POSITION: 1NO;9 NC	RLY. TEST BLK.
013	+402BRA	BLKB	GBRLYTESTBLKNEL	NELSTER	TEST BLOCK, 10 CONTACT POSITION: 1NO;9 NC	RLY. TEST BLK.
014	+402BRA	BLKC	GBRLYTESTBLKNEL	NELSTER	TEST BLOCK, 10 CONTACT POSITION: 1NO;9 NC	RLY. TEST BLK.
015	+402BRA	TTB	-	DAV	TEST TERMINAL BLOCK	TEST TERMINAL BLK.

NOTE : @@ TVM NOT IN SEIL SCOPE OF SUPPLY
##96A / 96B TRIP RELAYS NOT IN SEIL SCOPE OF SUPPLY

CUSTOMER : JALPURA KHURJA POWER TRANSMISSION LTD. (THE TATA POWER COMPANY LTD.) **PROJECT :** SUPPLY OF CRP & SAS AT 400/220kV METRO DEPOT GIS	**CONTRACTOR :** BAJEL PROJECTS LIMITED	Schneider Electric	**TITLE :** 400kV BUS REACTOR CONTROL & PROTN. PANEL (BAY-402) BILL OF MATERIAL : +402BRA
PO. No.& Date : 6100001138 DATED: 28.04.2024			**PANEL TYPE :** +402BRA,+402BRB

PREPARED : BG	REVISION: Z	SHT :002
REVIEWED : BG	DATE: 21-04-2025	CONT: 003
APPROVED : RKK		
DRG. NO.: I1-226736082-GL-02		

This document is the exclusive property of Schneider Electric and shall not be used, copied or communicated to third parties without prior authorization.

INTERNAL VIEW EQUIPMENTS

▲ SL.NO	PANEL	DESIGNATION	MATERIAL	MANUFACTURER	DESCRIPTION
001	+402BRA	CIL	GB20510130000010	PHILIPS	PANEL LED LAMP-12 INCH - 8W 230V AC
002	+402BRA	DS	B20424005100011	KAYCEE	DOOR SWITCH
003	+402BRA	EL1	LINK	SIEMENS/REPUTED	EARTH LINK
004	+402BRA	EL2	LINK	SIEMENS/REPUTED	EARTH LINK
005	+402BRA	EL3	LINK	SIEMENS/REPUTED	EARTH LINK
006	+402BRA	EL4	LINK	SIEMENS/REPUTED	EARTH LINK
007	+402BRA	EL5	LINK	SIEMENS/REPUTED	EARTH LINK
008	+402BRA	FS11	FUSE - 25A, DC	SIEMENS / REPUTED	FUSE - 25A, DC
009	+402BRA	FS12	FUSE - 25A, DC	SIEMENS / REPUTED	FUSE - 25A, DC
010	+402BRA	FS13	FUSE - 25A, DC	SIEMENS / REPUTED	FUSE - 25A, DC
011	+402BRA	FS14	FUSE - 25A, DC	SIEMENS / REPUTED	FUSE - 25A, DC
012	+402BRA	FS91	FUSE - 16A, AC	SIEMENS / REPUTED	FUSE - 16A, AC
013	+402BRA	FS101	FUSE - 6A, DC	SIEMENS / REPUTED	FUSE - 6A, DC
014	+402BRA	FS102	FUSE - 6A, DC	SIEMENS / REPUTED	FUSE - 6A, DC
015	+402BRA	FS103	FUSE - 6A, DC	SIEMENS / REPUTED	FUSE - 6A, DC
016	+402BRA	FS104	FUSE - 6A, DC	SIEMENS / REPUTED	FUSE - 6A, DC
017	+402BRA	FS413	FUSE - 4A, AC	SIEMENS / REPUTED	FUSE - 4A, AC
018	+402BRA	FS433	FUSE - 4A, AC	SIEMENS / REPUTED	FUSE - 4A, AC
019	+402BRA	FS453	FUSE - 4A, AC	SIEMENS / REPUTED	FUSE - 4A, AC
020	+402BRA	FS613	FUSE - 4A, AC	SIEMENS / REPUTED	FUSE - 4A, AC
021	+402BRA	FS633	FUSE - 4A, AC	SIEMENS / REPUTED	FUSE - 4A, AC
022	+402BRA	FS653	FUSE - 4A, AC	SIEMENS / REPUTED	FUSE - 4A, AC
023	+402BRA	HS	GB2072305APT00001	SWITRON	HEATER SWITCH
024	+402BRA	HT	HT-60W-230AC	APT CONTROLS	HEATER 230V AC 50HZ, 60W
025	+402BRA	LK91	LINK	SIEMENS / REPUTED	LINK
026	+402BRA	LK473	LINK	SIEMENS / REPUTED	LINK
027	+402BRA	LK673	LINK	SIEMENS / REPUTED	LINK
028	+402BRA	PS	GBPS515A230VAC	ANCHOR	POWER SOCKET 5/15A WITH SWITCH + 3PIN PLUG, 230V AC
029	+402BRA	R86A	GB40422330001350	STEAD	RESISTOR, 3.3K-OHMS, 35W
030	+402BRA	R96A	GB40422330001350	STEAD	RESISTOR, 3.3K-OHMS, 35W
031	+402BRA	TB-E-RES	--	REPUTED	1MEGHA-OHMS RESISTOR
032	+402BRA	TH	GBCPE0000612	APT CONTROLS	THERMOSTAT 230V AC, 30-90 DEG
033	+402BRA	X1	GBOAT25	ELMEX	NON-DISCONNECTING TERMINAL BLOCK OAT25
034	+402BRA	X2	GB20117002300197	ELMEX	DISCONNECTING TERMINAL BLOCK-OAT6DTS
035	+402BRA	X4	GB20118410317007	ELMEX	NON-DISCONNECTING TERMINAL BLOCK OAT6
036	+402BRA	X5	GB20118410317007	ELMEX	NON-DISCONNECTING TERMINAL BLOCK OAT6
037	+402BRA	X7	GB20118410317007	ELMEX	NON-DISCONNECTING TERMINAL BLOCK OAT6
038	+402BRA	X100	GB20118410317007	ELMEX	NON-DISCONNECTING TERMINAL BLOCK OAT6
039	+402BRA	X101	GB20118410317007	ELMEX	NON-DISCONNECTING TERMINAL BLOCK OAT6
040	+402BRA	X200	GB20118410317007	ELMEX	NON-DISCONNECTING TERMINAL BLOCK OAT6

This document is the exclusive property of Schneider Electric and shall not be used, copied or communicated to third parties without prior authorization.

CUSTOMER : JALPURA KHURJA POWER TRANSMISSION LTD. (THE TATA POWER COMPANY LTD.)
PROJECT : SUPPLY OF CRP & SAS AT 400/220kV METRO DEPOT GIS
PO. No.& Date : 6100001138 DATED: 28.04.2024

CONTRACTOR : BAJEL PROJECTS LIMITED

Schneider Electric

TITLE : 400kV BUS REACTOR CONTROL & PROTN. PANEL (BAY-402) BILL OF MATERIAL : +402BRA
PANEL TYPE : +402BRA,+402BRB

PREPARED : BG
REVIEWED : BG
APPROVED : RKK
REVISION: Z
DATE: 21-04-2025
SHT :003
CONT: 004
DRG. NO.: I1-226736082-GL-02

▲ SL.NO	PANEL	DESIGNATION	MATERIAL	MANUFACTURER	DESCRIPTION
041	+402BRA	X201	GB20118410317007	ELMEX	NON-DISCONNECTING TERMINAL BLOCK OAT6
042	+402BRA	X202A	GB20118410317007	ELMEX	NON-DISCONNECTING TERMINAL BLOCK-OAT6
043	+402BRA	X202B	GB20118410317007	ELMEX	NON-DISCONNECTING TERMINAL BLOCK-OAT6
044	+402BRA	X-TB-E-RES	GB20117002300197	ELMEX	DISCONNECTING TERMINAL BLOCK-OAT6DTS
045	+402BRA	X:ISOL	-	ELMEX	DISCONNECTING TERMINAL BLOCK-KLTDM4
046	+402BRA	X:NIFPS	GB20118410317007	ELMEX	NON-DISCONNECTING TERMINAL BLOCK OAT6
047	+402BRA	XEM4	GB20118410317007	ELMEX	NON-DISCONNECTING TERMINAL BLOCK OAT6

This document is the exclusive property of Schneider Electric and shall not be used, copied or communicated to third parties without prior authorization.

CUSTOMER : JALPURA KHURJA POWER TRANSMISSION LTD.
(THE TATA POWER COMPANY LTD.)
PROJECT : SUPPLY OF CRP & SAS AT 400/220kV METRO DEPOT GIS

PO. No.& Date : 6100001138 DATED: 28.04.2024

CONTRACTOR : BAJEL PROJECTS LIMITED

Schneider Electric

TITLE : 400kV BUS REACTOR
CONTROL & PROTN. PANEL (BAY-402)
BILL OF MATERIAL : +402BRA

PANEL TYPE : +402BRA,+402BRB

PREPARED : BG
REVIEWED : BG
APPROVED : RKK

REVISION: Z
DATE: 21-04-2025

SHT : 004
CONT: 005

DRG. NO.: I1-226736082-GL-02

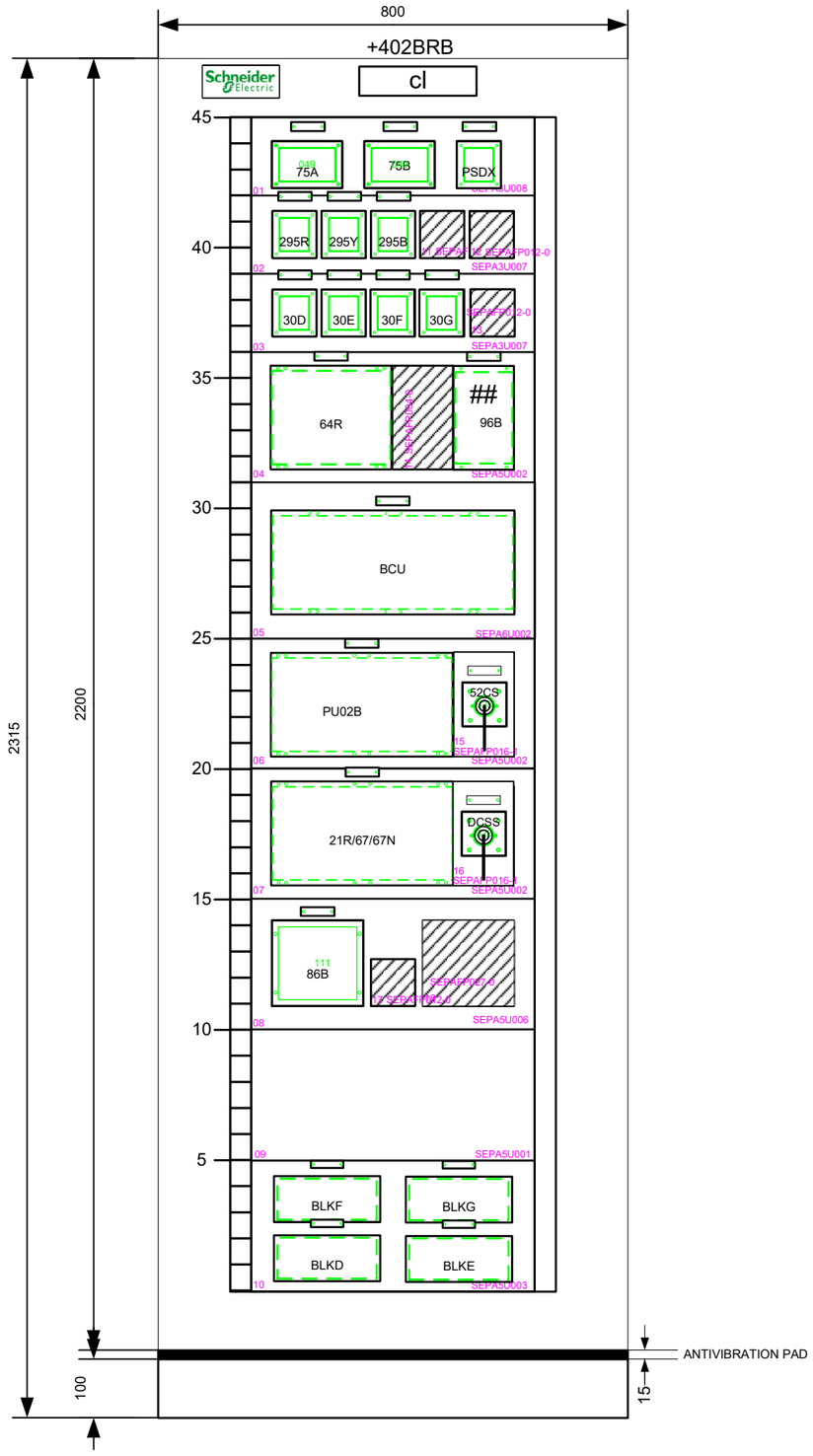

Designation	Material	Description
01	SEPA3U008	3U-2NO'S OF 120x80 & 1NO OF 75x80 SIZE SE RELAY
02	SEPA3U007	3U-5NO'S OF 75x80 SIZE SE RELAY
03	SEPA3U007	3U-5NO'S OF 75x80 SIZE SE RELAY
04	SEPA5U002	5U-STANDARD MIDOS/MICOM/EASUN REALY PLATE
05	SEPA6U002	6U-STANDARD MIDOS/MICOM/EASUN REALY PLATE
06	SEPA5U002	5U-STANDARD MIDOS/MICOM/EASUN REALY PLATE
07	SEPA5U002	5U-STANDARD MIDOS/MICOM/EASUN REALY PLATE
08	SEPA5U006	5U-2NO'S OF 16 C/O & 1NO OF 75x80 SIZE SE RELAY
09	SEPA5U001	5U-BLANKING PLATE
10	SEPA5U003	5U-4NO'S OF NELSTER/MPG BLK
11	SEPAFP012-0	FP-75X80 - SCHNEIDER
12	SEPAFP012-0	FP-75X80 - SCHNEIDER
13	SEPAFP012-0	FP-75X80 - SCHNEIDER
14	SEPAFP004-0	FP-SIZE:4
15	SEPAFP016-1	FP-SIZE:4 1NO SWITCH
16	SEPAFP016-1	FP-SIZE:4 1NO SWITCH
17	SEPAFP012-0	FP-75X80 - SCHNEIDER
18	SEPAFP027-0	FP-MASTER TRIP RELAY BAXBH16

NOTE: ##96B TRIP RELAYS NOT IN SEIL SCOPE OF SUPPLY

This document is the exclusive property of Schneider Electric and shall not be used, copied or communicated to third parties without prior authorization.

CUSTOMER : JALPURA KHURJA POWER TRANSMISSION LTD.	CONTRACTOR : BAJEL PROJECTS LIMITED	TITLE : 400kV BUS REACTOR CONTROL & PROTN. PANEL (BAY-402) GENERAL ARRANGEMENT: 402BRB FRONT VIEW	PREPARED : BG
PROJECT : SUPPLY OF CRP & SAS AT 400/220kV METRO DEPOT GIS			REVISION: Z
PO. No.& Date : 6100001138 DATED: 28.04.2024			REVIEWED : BG
			DATE: 21-04-2025
			APPROVED : RKK
			SHT :005
			CONT:006
			DRG. NO.: I1-226736082-GL-02

FRONT VIEW EQUIPMENTS

▲ SL.NO	PANEL	DESIGNATION	MATERIAL	MANUFACTURER	DESCRIPTION	COMMENT/LABEL LINE-02
001	+402BRB	21R/67/67N	P44231QAGM0E38M	SCHNEIDER ELECTRIC	BACKUP IMPEDANCE PROTN. AUX VOTL: 110-2500V DC/110-210V AC, INOM:1A/5A, VNOM:100-120V AC, OPTO I/P: 16, O/P CONTACT: 21, PROTOCOL: IEC61850 OVER ETHERNET & COURIER VIA REAR RS485,,COMMUMICATION PORT: 2LC+1RJ45 CASE: 60TE, MOUNTING: PANEL	B/U IMP / OC & EF RLY.
002	+402BRB	64R	P14131QNGM0B98L	SCHNEIDER ELECTRIC	REF PROTN., AUX VOTL: 110-250V DC/110-120V AC, INOM:1A/5A, VNOM:100-120V AC, OPTO I/P: 8, O/P CONTACT: 8, PROTOCOL: IEC61850 COURIER VIA REAR RS485,COMMUMICATION PORT: 2LC+1RJ45 CASE: 40TE, MOUNTING: PANEL	REF PROTN. RLY.
003	+402BRB	PU02B	P743311A1M0B18M	SCHNEIDER ELECTRIC	BUSBAR PROTN. PERIPHERAL UNIT., AUX VOTL: 110V-250V DC/100-240V AC, INOM:1A/5A, OPTO I/P: 24, O/P CONTACT: 16, PROTOCOL: COURIER (K-BUS) CASE: 60TE, MOUNTING: PANEL. (850nm MULTIMODE FO WITH ST CONNECTOR FOR CONNECTION BETWEEN PU & CU)(PATCH CABLE)	PERIPHERAL UNIT
004	+402BRB	BCU	C264	SCHNEIDER ELECTRIC	BAY CONTROL UNIT WITH CT/VT MODULE, AUX VOLT: 110-250V DC, DIGITAL INPUT MODULE: 6 DIGITAL OUTPUT MODULE: 5, ANALOG INPUT MODULE:1, ROTOCOL: IEC61850, CASE: 80TE	BAY CONTROL UNIT
005	+402BRB	30D	GBINSERAAS4F220	SCHNEIDER ELECTRIC	CONTACT MULTIPLICATION RELAY, 4 C/O, SELF RESET CONTACTS WITH HAND RESET FLAG, 220V DC (+10-20% OF UN) ,FLUSH MOUNTING.	PRD-1 TRIP
006	+402BRB	30E	GBINSERAAS4F220	SCHNEIDER ELECTRIC	CONTACT MULTIPLICATION RELAY, 4 C/O, SELF RESET CONTACTS WITH HAND RESET FLAG, 220V DC (+10-20% OF UN) ,FLUSH MOUNTING.	PRD-2 TRIP
007	+402BRB	30F	GBINSERAAS4F220	SCHNEIDER ELECTRIC	CONTACT MULTIPLICATION RELAY, 4 C/O, SELF RESET CONTACTS WITH HAND RESET FLAG, 220V DC (+10-20% OF UN) ,FLUSH MOUNTING.	PNRV TRIP
008	+402BRB	30G	GBINSERAAS4F220	SCHNEIDER ELECTRIC	CONTACT MULTIPLICATION RELAY, 4 C/O, SELF RESET CONTACTS WITH HAND RESET FLAG, 220V DC (+10-20% OF UN) ,FLUSH MOUNTING.	OTI TRIP
009	+402BRB	86B	GBINSEBAXBH16220	SCHNEIDER ELECTRIC	ELECTRICAL & HAND RESET TRIP RELAY, 16 C/O, ELECTRICAL & HAND RESET CONTACTS WITH FOLLOWING FLAG, 220V DC (+10-20% OF UN), FLUSH MOUNTING	MASTER TRIP RLY.
010	+402BRB	96B	ADE-TX24-14HB4GXX	ASHIDA	ELECTRICAL RESET TRIP RELAY, 16M4B ER : FLAG-YES : 220V DC: CASE SIZE:E4 (CUSTOMER SCOPE OF SUPPLY)	BB/LBB TRIP RLY.
011	+402BRB	75A	GBINSEBAXEH8220	SCHNEIDER ELECTRIC	ELECTRICAL RESET RELAY, 8 C/O, ELECTRICAL RESET CONTACTS WITH FOLLOWING FLAG, 220V DC (+10-20% OF UN) ,FLUSH MOUNTING.	VOLTAGE SEL. RLY.
012	+402BRB	75B	GBINSEBAXEH8220	SCHNEIDER ELECTRIC	ELECTRICAL RESET RELAY, 8 C/O, ELECTRICAL RESET CONTACTS WITH FOLLOWING FLAG, 220V DC (+10-20% OF UN) ,FLUSH MOUNTING.	VOLTAGE SEL. RLY.
013	+402BRB	295R	GBINSEVD3X220	SCHNEIDER ELECTRIC	TRIP CIRCUIT SUPERVISION RELAY, 2 C/O, SELF RESET CONTACTS WITH LED INDICATION, 220V DC (+10-20% OF UN) ,DROP OUT TIME: >200MS, FLUSH MOUNTING.	TC-2 R-PH SUPVN.
014	+402BRB	295Y	GBINSEVD3X220	SCHNEIDER ELECTRIC	TRIP CIRCUIT SUPERVISION RELAY, 2 C/O, SELF RESET CONTACTS WITH LED INDICATION, 220V DC (+10-20% OF UN) ,DROP OUT TIME: >200MS, FLUSH MOUNTING.	TC-2 Y-PH SUPVN.
015	+402BRB	295B	GBINSEVD3X220	SCHNEIDER ELECTRIC	TRIP CIRCUIT SUPERVISION RELAY, 2 C/O, SELF RESET CONTACTS WITH LED INDICATION, 220V DC (+10-20% OF UN) ,DROP OUT TIME: >200MS, FLUSH MOUNTING.	TC-2 B-PH SUPVN.
016	+402BRB	52CS	GBSS3NLSLAPKW06	SWITRON	TYPE:SPRING RETURN WITH LAST MOTION DEVICE, 20 WAYS, 3 POSITIONS, NON LOCKABLE, CIRCUIT LABEL :TRIP * NEUTRAL * CLOSE, HANDLE: PISTOL GRIP , BLACK COLOUR, BEZEL: RED COLOUR	CB CONTROL SW.
017	+402BRB	DCSS	GBSS3NLSPAPAW13	SWITRON	TYPE: STAYPUT, 10 WAYS, 3 POSITIONS, NON LOCKABLE, CIRCUIT LABEL : DC-1 * IND * DC-2, HANDLE: PISTOL GRIP , BLACK COLOUR, BEZEL: GREY COLOUR	DC SELECTOR SW.
018	+402BRB	PSDX	GBINSEBAXEH4220	SCHNEIDER ELECTRIC	ELECTRICAL RESET RELAY, 4 C/O, ELECTRICAL RESET CONTACTS WITH FOLLOWING FLAG, 220V DC (+10-20% OF UN) ,FLUSH MOUNTING.	PSD BYPASS RLY.
019	+402BRB	BLKD	GBRLYTESTBLKNEL	NELSTER	TEST BLOCK, 10 CONTACT POSITION: 1NO;9 NC	RLY TEST BLK.
020	+402BRB	BLKE	GBRLYTESTBLKNEL	NELSTER	TEST BLOCK, 10 CONTACT POSITION: 1NO;9 NC	RLY TEST BLK.
021	+402BRB	BLKF	GBRLYTESTBLKNEL	NELSTER	TEST BLOCK, 10 CONTACT POSITION: 1NO;9 NC	RLY TEST BLK.
022	+402BRB	BLKG	GBBCUTESTBLKNEL	NELSTER	TEST BLOCK, 10 CONTACT POSITION: 10 NC	BCU TEST BLK.

NOTE : ##96A / 96B TRIP RELAYS NOT IN SEIL SCOPE OF SUPPLY

CUSTOMER : JALPURA KHURJA POWER TRANSMISSION LTD. (THE TATA POWER COMPANY LTD.) PROJECT : SUPPLY OF CRP & SAS AT 400/220kV METRO DEPOT GIS	CONTRACTOR : BAJEL PROJECTS LIMITED	TITLE : 400kV BUS REACTOR CONTROL & PROTN. PANEL (BAY-402) BILL OF MATERIAL : 402BRB	PREPARED : BG REVIEWED : BG APPROVED : RKK REVISION: Z DATE: 21-04-2025 SHT :006 CONT: 007
PO. No.& Date : 6100001138 DATED: 28.04.2024		PANEL TYPE : +402BRA,+402BRB	DRG. NO.: I1-226736082-GL-02

This document is the exclusive property of Schneider Electric and shall not be used, copied or communicated to third parties without prior authorization.

INTERNAL VIEW EQUIPMENTS

▲ SL.NO	PANEL	DESIGNATION	MATERIAL	MANUFACTURER	DESCRIPTION
001	+402BRB	CIL	GBPS515A230VAC	PHILIPS	COMPACT FLOURESCENT LAMP - 11W 240V AC
002	+402BRB	DS	GB20424005100011	KAYCEE	DOOR SWITCH
003	+402BRB	EL1	EARTH LINK	SIEMENS/REPUTED	EARTH LINK
004	+402BRB	EL2	EARTH LINK	SIEMENS/REPUTED	EARTH LINK
005	+402BRB	EL3	EARTH LINK	SIEMENS/REPUTED	EARTH LINK
006	+402BRB	FS21	FUSE - 25A, DC	SIEMENS / REPUTED	FUSE - 25A, DC
007	+402BRB	FS22	FUSE - 25A, DC	SIEMENS / REPUTED	FUSE - 25A, DC
008	+402BRB	FS23	FUSE - 25A, DC	SIEMENS / REPUTED	FUSE - 25A, DC
009	+402BRB	FS24	FUSE - 25A, DC	SIEMENS / REPUTED	FUSE - 25A, DC
010	+402BRB	FS91	FUSE - 16A, AC	SIEMENS / REPUTED	FUSE - 16A, AC
011	+402BRB	FS201	FUSE - 6A, DC	SIEMENS / REPUTED	FUSE - 6A, DC
012	+402BRB	FS202	FUSE - 6A, DC	SIEMENS / REPUTED	FUSE - 6A, DC
013	+402BRB	FS203	FUSE - 6A, DC	SIEMENS / REPUTED	FUSE - 6A, DC
014	+402BRB	FS204	FUSE - 6A, DC	SIEMENS / REPUTED	FUSE - 6A, DC
015	+402BRB	FS205	FUSE - 6A, DC	SIEMENS / REPUTED	FUSE - 6A, DC
016	+402BRB	FS206	FUSE - 6A, DC	SIEMENS / REPUTED	FUSE - 6A, DC
017	+402BRB	FS301	FUSE - 6A, DC	SIEMENS / REPUTED	FUSE - 6A, DC
018	+402BRB	FS302	FUSE - 6A, DC	SIEMENS / REPUTED	FUSE - 6A, DC
019	+402BRB	FS303	FUSE - 6A, DC	SIEMENS / REPUTED	FUSE - 6A, DC
020	+402BRB	FS304	FUSE - 6A, DC	SIEMENS / REPUTED	FUSE - 6A, DC
021	+402BRB	FS417	FUSE - 4A, AC	SIEMENS / REPUTED	FUSE - 4A, AC
022	+402BRB	FS437	FUSE - 4A, AC	SIEMENS / REPUTED	FUSE - 4A, AC
023	+402BRB	FS457	FUSE - 4A, AC	SIEMENS / REPUTED	FUSE - 4A, AC
024	+402BRB	FS617	FUSE - 4A, AC	SIEMENS / REPUTED	FUSE - 4A, AC
025	+402BRB	FS637	FUSE - 4A, AC	SIEMENS / REPUTED	FUSE - 4A, AC
026	+402BRB	FS657	FUSE - 4A, AC	SIEMENS / REPUTED	FUSE - 4A, AC
027	+402BRB	HS	GB25317014000000	SWITRON	HEATER SWITCH
028	+402BRB	HT	GB2072305APT00001	APT CONTROLS	HEATER 240V AC 50HZ, 60W
029	+402BRB	LK91	LINK	SIEMENS / REPUTED	LINK
030	+402BRB	LK477	LINK	SIEMENS / REPUTED	LINK
031	+402BRB	LK677	LINK	SIEMENS / REPUTED	LINK
032	+402BRB	ODU	GBDOM40B220A	NANDI POWER	OR-ING DIODE UNIT : 220V DC RATING-40A
033	+402BRB	PS	GBPS515A230VAC	ANCHOR	POWER SOCKET 5/15A WITH SWITCH + 3PIN PLUG, 230V AC
034	+402BRB	R86B	GB40422330001350	STEAD	RESISTOR, 3.3K-OHMS, 35W
035	+402BRB	R96B	GB40422330001350	STEAD	RESISTOR, 3.3K-OHMS, 35W
036	+402BRB	SD	GB15020127181091AW	REPUTED	Metrosil Varistor-HVR
037	+402BRB	SR	GBCPE0000333	STEAD	STABILIZING RESISTOR,1000 ohm 200W
038	+402BRB	TB-E-RES	--	REPUTED	1MEGHA-OHMS RESISTOR
039	+402BRB	TH	GBCPE0000612	APT CONTROLS	THERMOSTAT 230V AC, 30-90 DEG
040	+402BRB	X1	GBOAT25	ELMEX	NON-DISCONNECTING TERMINAL BLOCK OAT25
041	+402BRB	X2	GB20117002300197	ELMEX	DISCONNECTING TERMINAL BLOCK-OAT6DTS
042	+402BRB	X3	GB20117002300197	ELMEX	DISCONNECTING TERMINAL BLOCK-OAT6DTS
043	+402BRB	X4	GB20118410317007	ELMEX	NON-DISCONNECTING TERMINAL BLOCK OAT6
044	+402BRB	X5	GB20118410317007	ELMEX	NON-DISCONNECTING TERMINAL BLOCK OAT6

This document is the exclusive property of Schneider Electric and shall not be used, copied or communicated to third parties without prior authorization.

CUSTOMER : JALPURA KHURJA POWER TRANSMISSION LTD. (THE TATA POWER COMPANY LTD.)
PROJECT : SUPPLY OF CRP & SAS AT 400/220kV METRO DEPOT GIS
PO. No.& Date : 6100001138 DATED: 28.04.2024

CONTRACTOR : BAJEL PROJECTS LIMITED

Schneider Electric

TITLE : 400kV BUS REACTOR CONTROL & PROTN. PANEL (BAY-402) BILL OF MATERIAL : 402BRB
PANEL TYPE : +402BRA,+402BRB

PREPARED : BG
REVIEWED : BG
APPROVED : RKK
REVISION: Z
DATE: 21-04-2025
SHT :007
CONT: 008
DRG. NO.: I1-226736082-GL-02

INTERNAL VIEW EQUIPMENTS

▲ SL....	PANEL	DESIGNATION	MATERIAL	MANUFACTURER	DESCRIPTION
045	+402BRB	X7	GB20118410317007	ELMEX	NON-DISCONNECTING TERMINAL BLOCK OAT6
046	+402BRB	X10	GB20118410317007	ELMEX	NON-DISCONNECTING TERMINAL BLOCK OAT6
047	+402BRB	X100	GB20118410317007	ELMEX	NON-DISCONNECTING TERMINAL BLOCK OAT6
048	+402BRB	X101	GB20118410317007	ELMEX	NON-DISCONNECTING TERMINAL BLOCK OAT6
049	+402BRB	X200	GB20118410317007	ELMEX	NON-DISCONNECTING TERMINAL BLOCK OAT6
050	+402BRB	X201	GB20118410317007	ELMEX	NON-DISCONNECTING TERMINAL BLOCK OAT6
051	+402BRB	X202A	GB20118410317007	ELMEX	NON-DISCONNECTING TERMINAL BLOCK-OAT6
052	+402BRB	X202B	GB20118410317007	ELMEX	NON-DISCONNECTING TERMINAL BLOCK-OAT6
053	+402BRB	X203A	GB20118410317007	ELMEX	NON-DISCONNECTING TERMINAL BLOCK-OAT6
054	+402BRB	X-BCU-AIU-D	GBKUT2.5	ELMEX	NON-DISCONNECTING TERMINAL BLOCK KUT2.5
055	+402BRB	X-BCU-DIU-K	GB20117002300197	ELMEX	DISCONNECTING TERMINAL BLOCK-OAT6DTS
056	+402BRB	X-BCU-DIU-L	GB20117002300197	ELMEX	DISCONNECTING TERMINAL BLOCK-OAT6DTS
057	+402BRB	X-BCU-DIU-M	GB20117002300197	ELMEX	DISCONNECTING TERMINAL BLOCK-OAT6DTS
058	+402BRB	X-BCU-DIU-N	GB20117002300197	ELMEX	DISCONNECTING TERMINAL BLOCK-OAT6DTS
059	+402BRB	X-BCU-DIU-O	GB20117002300197	ELMEX	DISCONNECTING TERMINAL BLOCK-OAT6DTS
060	+402BRB	X-BCU-DIU-P	GB20117002300197	ELMEX	DISCONNECTING TERMINAL BLOCK-OAT6DTS
061	+402BRB	X-BCU-DOU-E	GB20117002300197	ELMEX	DISCONNECTING TERMINAL BLOCK-OAT6DTS
062	+402BRB	X-BCU-DOU-F	GB20117002300197	ELMEX	DISCONNECTING TERMINAL BLOCK-OAT6DTS
063	+402BRB	X-BCU-DOU-G	GB20117002300197	ELMEX	DISCONNECTING TERMINAL BLOCK-OAT6DTS
064	+402BRB	X-BCU-DOU-H	GB20117002300197	ELMEX	DISCONNECTING TERMINAL BLOCK-OAT6DTS
065	+402BRB	X-BCU-DOU-I	GB20117002300197	ELMEX	DISCONNECTING TERMINAL BLOCK-OAT6DTS
066	+402BRB	X-BCU-PS-A	GB20118410317007	ELMEX	NON DISCONNECTING TERMINAL BLOCK-OAT6
067	+402BRB	X-TB-E-RES	GB20117002300197	ELMEX	DISCONNECTING TERMINAL BLOCK-OAT6DTS
068	+402BRB	X:ISOL	-	ELMEX	DISCONNECTING TERMINAL BLOCK-KLTDM4

This document is the exclusive property of Schneider Electric and shall not be used, copied or communicated to third parties without prior authorization.

CUSTOMER : JALPURA KHURJA POWER TRANSMISSION LTD. (THE TATA POWER COMPANY LTD.) PROJECT : SUPPLY OF CRP & SAS AT 400/220kV METRO DEPOT GIS	CONTRACTOR : BAJEL PROJECTS LIMITED	Schneider Electric	TITLE : 400kV BUS REACTOR CONTROL & PROTN. PANEL (BAY-402) BILL OF MATERIAL : 402BRB	PREPARED : BG REVIEWED : BG APPROVED : RKK REVISION: Z DATE: 21-04-2025 SHT :008 CONT: NIL
PO. No.& Date : 6100001138 DATED: 28.04.2024			PANEL TYPE : +402BRA,+402BRB	DRG. NO.: I1-226736082-GL-02

This document is the exclusive property of Schneider Electric and shall not be used, copied or communicated to third parties without prior authorization.

SHEET	DESCRIPTION
000	INDEX SHEET
001	LIST OF SYMBOLS
002	SINGLE LINE DIAGRAM
003	TRIP LOGIC
004	AC DISTRIBUTION CKT.
005	DC DISTRIBUTION CKT.
006	DC DISTRIBUTION CKT.
007	DC CHANGEOVER SCHEME
008	CT DISTRIBUTION CIRCUIT
009	CT DISTRIBUTION CIRCUIT
010	CT DISTRIBUTION CIRCUIT
011	BUS-1 CVT DISTRIBUTION CKT.
012	BUS-2 CVT DISTRIBUTION CKT.
013	VOLTAGE SELECTION CIRCUIT
014	METERING CIRCUIT
015	DIFF.PROTN.-CT CKT.
016	DIFF.PROTN.-CT CKT.
017	DIFF.PROTN.-VT CKT.
018	DIFF.PROTN.-VT CKT.
019	DIFF.PROTN.-OPTO CKT.
020	DIFF.PROTN.-OPTO CKT.
021	DIFF.PROTN.-OPTO CKT.
022	DIFF. RELAY (87R) CONTACT DISTRIBUTION
023	DIFF. RELAY (87R) CONTACT DISTRIBUTION
024	DIFF. PROTN.(87R) - I/O CONFIGURATION
025	DIFF. PROTN.(87R) - I/O CONFIGURATION
026	BACKUP IMPEDANCE
027	BACKUP IMPEDANCE OPTO
028	BACKUP IMPEDANCE OPTO
029	BACKUP IMPEDANCE RELAY
030	BACKUP IMPEDANCE
031	BACKUP IMPEDANCE
032	REACTOR TROUBLES CIRCUIT
033	REACTOR TROUBLES CIRCUIT
034	REACTOR TROUBLES
035	REACTOR TROUBLES
036	REF PROTN. CKT.
037	REF PROTN.-OPTO CKT.
038	REF RELAY
039	REF PROTN.
040	PU02A-CT CKT.
041	PU02A-OPTO CKT.

SHEET	DESCRIPTION
042	PU02A-OPTO CKT.
043	PU02A-OPTO CKT.
044	PU02A CONTACT DISTRIBUTION
045	PU02A RELAY FUNCTIONS I/O DETAILS
046	PU02A RELAY FUNCTIONS I/O DETAILS
047	PU02B-CT CKT.
048	PU02B-OPTO CKT.
049	PU02B-OPTO CKT.
050	PU02B-OPTO CKT.
051	PU02B CONTACT DISTRIBUTION
052	PU02B - INPUTS & OUTPUTS
053	PU02B RELAY FUNCTIONS I/O DETAILS
054	GROUP-A TRIP RELAY
055	GROUP-B TRIP RELAY
056	GROUP-B TRIP RELAY CKT.
057	GROUP-B TRIP RELAY CKT.
058	CB CLOSING CKT.
059	CB CLOSING CKT.
060	CB TC-1 CONTROL CKT.
061	CB TC-1 CONTROL CKT.
062	CB TC-1 CONTROL CKT.
063	CB TC-2 CONTROL CKT.
064	CB TC-1 CONTROL CKT.
065	CB TC-2 CONTROL CKT.
066	BCU LOGIC
067	BCU LOGIC
068	BCU LOGIC
069	BCU LOGIC
070	BCU LOGIC
071	BCU LOGIC
072	BCU CARD DETAIL
073	BCU AUX. SUPPLY CKT.
074	BCU CT/PT CKT.
075	BCU DIGITAL INPUT CARD
076	BCU DIGITAL INPUT CARD
077	BCU DIGITAL INPUT CARD
078	BCU DIGITAL INPUT CARD
079	BCU DIGITAL INPUT CARD
080	BCU DIGITAL INPUT CARD
081	BCU DIGITAL INPUT CARD
082	BCU DIGITAL INPUT CARD
083	BCU DIGITAL INPUT CARD

SHEET	DESCRIPTION
083	BCU DIGITAL INPUT CARD
084	BCU DIGITAL INPUT CARD
085	BCU DIGITAL INPUT CARD
086	BCU DIGITAL INPUT CARD
087	BCU DIGITAL OUTPUT CARD
088	BCU DIGITAL OUTPUT CARD
089	BCU DIGITAL OUTPUT CARD
090	BCU DIGITAL OUTPUT CARD
091	BCU DIGITAL OUTPUT CARD
092	BCU-ANALOG INPUT CARD
093	NIFPS PANEL CONTACT DISTRIBUTION
094	SPARE CONTACT DISTRIBUTION
095	SPARE CONTACT DISTRIBUTION
096	SWITCH CONTACT DISTRIBUTION
097	TERMINAL BLOCK ALLOCATION
098	TERMINAL BLOCK ALLOCATION
099	TERMINAL BLOCK ALLOCATION
100	TERMINAL BLOCK ALLOCATION
101	TERMINAL BLOCK ALLOCATION
102	BUS WIRING - INTRA-PANEL
103	BUS WIRING - INTRA-PANEL

CUSTOMER : JALPURA KHURJA POWER TRANSMISSION LTD. (THE TATA POWER COMPANY LTD.)
PROJECT : SUPPLY OF CRP & SAS AT 400/220kV METRO DEPOT GIS
PO. No.& Date : 6100001138 DATED: 28.04.2024

CONTRACTOR : BAJEL PROJECTS LIMITED

Schneider Electric

TITLE : 400kV BUS REACTOR CONTROL & PROTN. PANEL (BAY-402) INDEX SHEET

PANEL TYPE : +402BRA,+402BRB

PREPARED : BG
REVIEWED : BG
APPROVED : RKK
REVISION: Z
DATE: 21-04-2025
SHT :000
CONT: 001

DRG. NO.: I1-226736082-S-02

LIST OF STANDARD SYMBOLS

SYMBOL	DESCRIPTION	SYMBOL	DESCRIPTION	SYMBOL	DESCRIPTION	SYMBOL	DESCRIPTION	SYMBOL	DESCRIPTION
	COMPACT FLOURESCENT LAMP		PUSH BUTTON NO CONTACT		NORMALLY OPEN CONTACT SELF RESET		POWER SUPPLY		CIRCUIT BREAKER
	DOOR/HEATER SWITCH		PUSH BUTTON NC CONTACT		NORMALLY CLOSE CONTACT SELF RESET				ISOLATOR
	HEATER		TEST BLOCK		CHANGEOVER CONTACT SELF RESET		DIGITAL OPTO INPUT		
	POWER SOCKET WITH SWITCH		CONTROL SELECTOR SWITCH		NORMALLY OPEN CONTACT HAND RESET				
	THERMOSTAT		POTENTIAL TRANSFORMER		NORMALLY CLOSE CONTACT HAND RESET		CLIO OUTPUT		EARTH SWITCH
	FUSE		CURRENT TRANSFORMER		CHANGEOVER CONTACT HAND RESET		CLIO INPUT		LIGHTINING ARRESTER
	LINK		INDICATING LAMPS		SEMAPHORE		SELF-RESET COIL WITH/ WITHOUT FLAG		WAVE TRAP
	RESISTOR		ANNUNCIATOR WINDOW INPUT		TB PRIMARY EQUIPMENTS				GENERATOR
	POTENTIO METER		DIODE		NON-DISCONNETING TB		HAND-RESET COIL WITH/ WITHOUT FLAG		TRANSFOMER
	MCB		BUS WIRE REPRESENTATION SOURCE / TARGET		NON-DISCONNETING TB FOR SCADA/ BCU				
	METROSIL		NORMAL WIRE REPRESENTATION SOURCE / TARGET		DISCONNETING TB		SELF-RESET SLOW OPERAING COIL WITH REVERSE/ FORWARD FLAG		CAPACITIVE VOLTAGE TRANSFOMER
					NON-DISCONNETING TB FOR INTER PANEL BUS WIRING				

NOTE: RELAY CONTACTS SHOWN WITH CONTACT DE ENERGIZED CONDITION.

TERMINAL GROUP STANDARDS

TB REF	FUNCTION
X1	AC/DC CIRCUITS
X2	CT CIRCUITS
X3	PT CIRCUITS
X4	CONTROL INPUTS (TO OPTO/CONT MUL. RELAY)
X5	CONTROL OUTPUTS (TO CB CONTROL)
X6	CONTROL OUTPUTS (TO ISOL./ESW. CONTROL)
X7	SPARE OUTPUTS
X8	TEMP SCANNER/SCADA/RTU/DCS CKTS
X9	INDICATION/ANNUNCIATON CKTS
X-BCU DIU-SLOT	BCU DI INPUTS
X-BCU DOU-SLOT	BCU DO INPUTS
X-BCU AIU-SLOT	BCU AI INPUTS
X10	FOR INTER PANEL CABLES
X100	BUS WIRING CT/PT CKTS (INTRA-BAY)
X101-X109	BUS WIRING CONTROL CKTS (INTRA-BAY)
X200	BUS WIRING CT/PT CKTS (INTER-BAY)
X201-X209	BUS WIRING CONTROL CKTS (INTER-BAY)

FERRULE NUMBERING STANDARDS

FERRULE	CIRCUIT
"A"	CT CIRCUIT-MAIN PROTECTION
"B"	CT CIRCUIT-BUSBAR PROTECTION
"C"	CT CIRCUIT-BACKUP PROTECTION
"D"	CT CIRCUIT-METERING
"E"	VT CIRCUIT-PROTECTION/METERING
"G"	VT CIRCUIT-SYNCHRONISING
"H"	AUXILARY AC CIRCUIT
"J"	AUXILARY DC CIRCUIT
"K"	CONTROL CIRCUIT
"L"	INDICATION & ALARM CIRCUITS
"P"	DC CIRCUIT- BUSBAR PROTECTION CIRCUIT
"S"	SCADA/EVENT LOGGER/DAS CIRCUITS
"U"	SPARE CONTACTS

CUSTOMER : JALPURA KHURJA POWER TRANSMISSION LTD. (THE TATA POWER COMPANY LTD.) PROJECT : SUPPLY OF CRP & SAS AT 400/220kV METRO DEPOT GIS	CONTRACTOR : BAJEL PROJECTS LIMITED	Schneider Electric	TITLE : 400kV BUS REACTOR CONTROL & PROTN. PANEL (BAY-402) LIST OF SYMBOLS
PO. No.& Date : 6100001138 DATED: 28.04.2024			PANEL TYPE : +402BRA,+402BRB

PREPARED : BG	REVISION: Z	SHT :001
REVIEWED : BG	DATE: 21-04-2025	CONT: 002
APPROVED : RKK		
DRG. NO.: I1-226736082-S-02		

This document is the exclusive property of Schneider Electric and shall not be used, copied or communicated to third parties without prior authorization.

402-T1	402-T1	402-T1	402-T2	402-T2
CORE-1	CORE-2	CORE-3	CORE-1	CORE-2
RATIO: 3000-2000-1000/1A	RATIO: 3000-2000-1000 /1A	RATIO: 3000-2000-1000 /1A	RATIO: 3000-2000-1000 /1A	RATIO: 3000-2000-1000 /1A
CLASS : PX	CLASS : PX	CLASS: 0.2S	CLASS: PX	CLASS : PX
Vk(V)>3000-2000-1000 /1A	Vk(V)>3000-2000-1000 /1A	Vk(V)>3000-2000-1000 /1	Vk(V)>3000-2000-1000 /1	Vk(V)>3000-2000-1000 /1
Im@Vk(mA)< 20/30/60mA	Im@Vk(mA)< 20/30/60mA	ISF: <5	Im@Vk(mA)< 20/30/60mA	Im@Vk(mA)< 20/30/60mA
Rct<15/10/5Ohms	Rct<15/10/5 Ohm	-	Rct<15/10/5 Ohm	Rct<15/10/5 Ohm
ADOPTED CT: @@	ADOPTED CT: @@	ADOPTED CT: @@	ADOPTED CT: @@	ADOPTED CT: @@
402-NEUTRAL END CT	402-NEUTRAL END CT	402-NEUTRAL END CT	402-NEUTRAL END CT	402-COMM. NEUTRAL END CT
CORE-1	CORE-2	CORE-3	CORE-4	CORE-1
RATIO: 3000-2000-500/1A	RATIO: 3000-2000-500/1A	RATIO : 171.8/1.4-1.6-1.7/1A	RATIO: 200/1A	RATIO : 200/1A
CLASS : PX/PS	CLASS : PX/PS	CLASS : 5	CLASS : PX/PS	CLASS : PX/PS
Vk(V): 3000-2000-500V	Vk(V): 3000-2000-500V	burden: 15 VA	Vk(V): 200V	Vk(V) : 200V
Im@Vk(mA): 20/30/120 mA	Im@Vk(mA): 20/30/120 mA		Imax@Vk/4(mA): 250mA	Imax@Vk/4 (mA): 250mA
Rct: 15-10-2.5 ohm	Rct: 15-10-2.5 ohm		Rct: 1 ohm	Rct: 1 ohm
	-			-

402R-BCT	402R-BCT	402R-BCT	402R-BCT
CORE-1	CORE-2	CORE-3	CORE-4
RATIO: 200/1A	RATIO: 200/1A	RATIO: 200/1A	RATIO: 200/1A
CLASS : 1	CLASS : PX/PS	CLASS : PX/PS	CLASS : PX/PS
BURDEN: 10 VA	Vk(V): 200V	Vk(V): 200V	Vk(V): 200V
	Im@Vk/4 (mA): 250mA	Im@Vk/4 (mA): 250mA	Im@Vk/4 (mA): 250mA
	Rct: 1 ohm	Rct: 1 ohm	Rct: 1 ohm

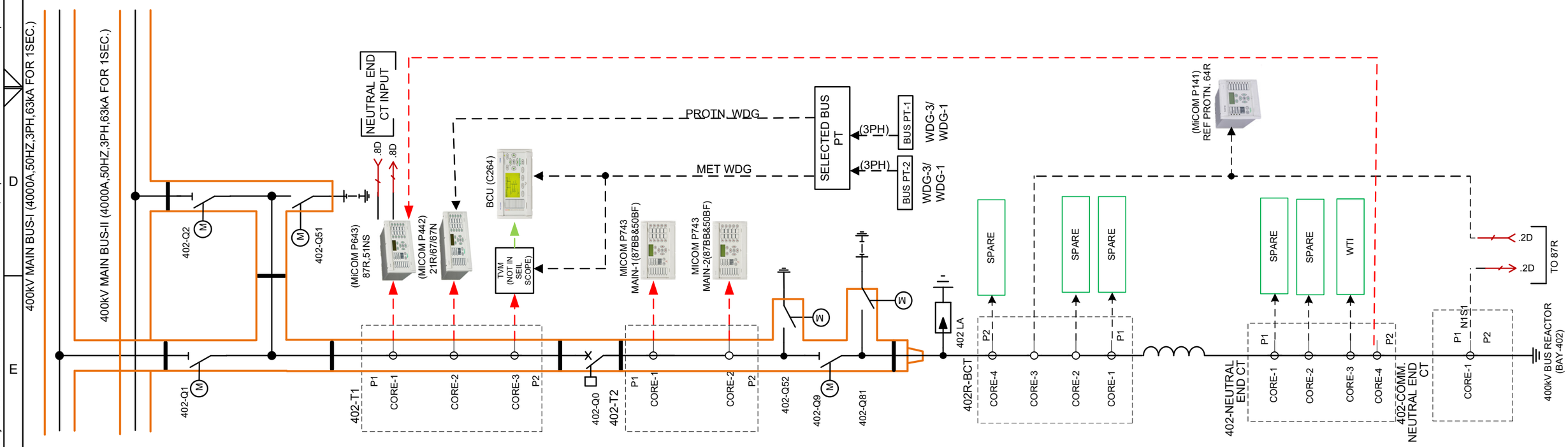

CUSTOMER : JALPURA KHURJA POWER TRANSMISSION LTD. (THE TATA POWER COMPANY LTD.) PROJECT : SUPPLY OF CRP & SAS AT 400/220kV METRO DEPOT GIS	CONTRACTOR : BAJEL PROJECTS LIMITED	Schneider Electric	TITLE : 400kV BUS REACTOR CONTROL & PROTN. PANEL (BAY-402) SINGLE LINE DIAGRAM	PREPARED : BG REVIEWED : BG APPROVED : RKK REVISION: Z DATE: 21-04-2025 SHT :002 CONT: 003
PO. No.& Date : 6100001138 DATED: 28.04.2024			PANEL TYPE : +402BRA,+402BRB	DRG. NO.: I1-226736082-S-02

This document is the exclusive property of Schneider Electric and shall not be used, copied or communicated to third parties without prior authorization.

		DIFF. PROTECTION RELAY 87R (MiCOMP643)		REF RELAY 64R (MiCOM P141)	BACKUP IMP/HV DIR.O/C & E/F PROTN 21R (MiCOM P442)			400kV BUSBAR PROTECTION (MiCOM P743) MAIN-1,2		REACTOR TROUBLES	MASTER TIRP RELAY (GRP 1/2)		BB/LBB TIRP RELAY (GRP 1/2)	
		DIFF. PROTN	SEF PROTECTION	REF PROTN	BACKUP IMPEDANCE PROTN.OPTD	DIR.O/C PROTN	DIR. E/F PROTN	BREAKER FAIL PROTECTION (LBB)	BUSBAR PROTECTION (87BB)	FIELD INPUTS: BUCHHOLZ TRIP,OTI TRIP, WTI TRIP,SPR TRIP, PNRV TRIP, PRD-1 TRIP, PRD-2 TRIP	3-PH GROUP-A TRIP LOCKOUT RELAY()	3-PH GROUP-B TRIP LOCKOUT RELAY()	3-PH GROUP-A TRIP RELAY()	3-PH GROUP-B TRIP RELAY()
ANSI CODE		87T	51NS	64	64	67	67N	50BF	87BB	30A-30G	86A	86B	96A	96B
PROTECTION TRIP		3-PH	3-PH	3-PH	3-PH	3-PH	3-PH	3-PH	3-PH	3-PH	3-PH	3-PH	3-PH	3-PH
400KV SIDE	TO CB TRIP COIL-1										TP	TP	TP	TP
	TO CB TRIP COIL-2										TP	TP	TP	TP
	CB CLOSE PERMISSIVE										RS	RS	RS	RS
	LBB INITIATION										IP	IP	IP	IP
	3-PH TRIP RELAY(86) GR-A	IP	IP	IP	IP	IP	IP			IP				
	3-PH TRIP RELAY(86) GR-B	IP	IP	IP	IP	IP	IP			IP				
	3-PH BB/LBB TRIP RELAY(96) GR-A							IP	IP					
	3-PH BB/LBB TRIP RELAY(96) GR-B							IP	IP					
	DR TRIGGER	IP	IP	IP	IP	IP	IP	IP	IP	IP	IP	IP	IP	IP

RS INDICATES RESET STATUS FOR CB CLOSING

TP INDICATES TRIP FROM PROTN. FUNCTION

IP INDICATES INTIATION FROM PROTN. FUNCTION

CUSTOMER : JALPURA KHURJA POWER TRANSMISSION LTD. (THE TATA POWER COMPANY LTD.) PROJECT : SUPPLY OF CRP & SAS AT 400/220kV METRO DEPOT GIS	CONTRACTOR : BAJEL PROJECTS LIMITED	TITLE : 400kV BUS REACTOR CONTROL & PROTN. PANEL (BAY-402) TRIP LOGIC	PREPARED : BG REVISION: Z SHT :003
PO. No.& Date : 6100001138 DATED: 28.04.2024			REVIEWED : BG DATE: 21-04-2025 CONT: 004
		PANEL TYPE : +402BRA,+402BRB	APPROVED : RKK DRG. NO.: I1-226736082-S-02

This document is the exclusive property of Schneider Electric and shall not be used, copied or communicated to third parties without prior authorization.

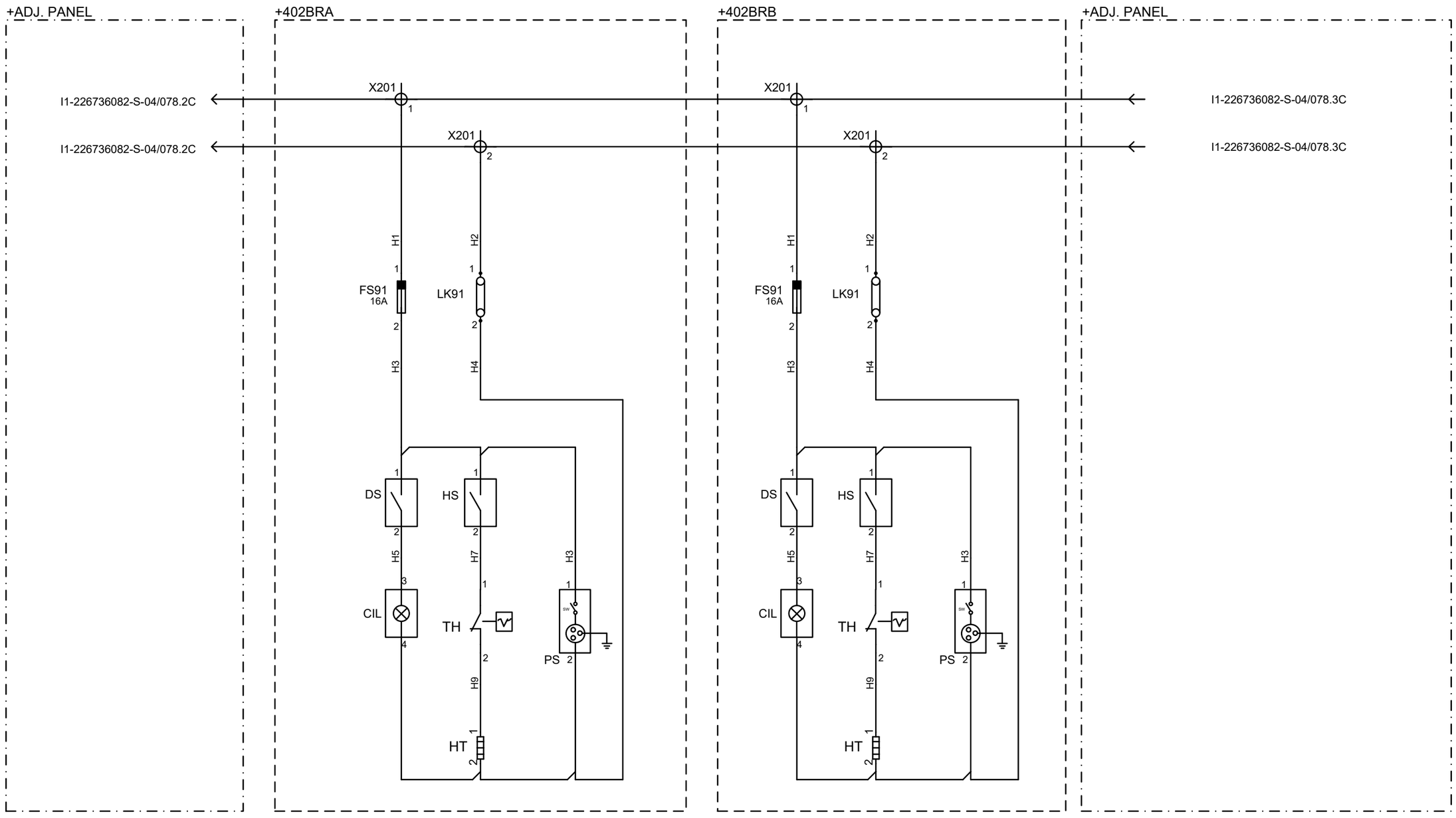

NOTE: ** TERMINALS TO BE IDENTIFIED AT SITE

CUSTOMER : JALPURA KHURJA POWER TRANSMISSION LTD. (THE TATA POWER COMPANY LTD.) PROJECT : SUPPLY OF CRP & SAS AT 400/220kV METRO DEPOT GIS	CONTRACTOR : BAJEL PROJECTS LIMITED	Schneider Electric	TITLE : 400kV BUS REACTOR CONTROL & PROTN. PANEL (BAY-402) AC DISTRIBUTION CKT.	PREPARED : BG REVIEWED : BG APPROVED : RKK	REVISION: Z DATE: 21-04-2025	SHT :004 CONT: 005
PO. No.& Date : 6100001138 DATED: 28.04.2024			PANEL TYPE : +402BRA,+402BRB	DRG. NO.: I1-226736082-S-02		

This document is the exclusive property of Schneider Electric and shall not be used, copied or communicated to third parties without prior authorization.

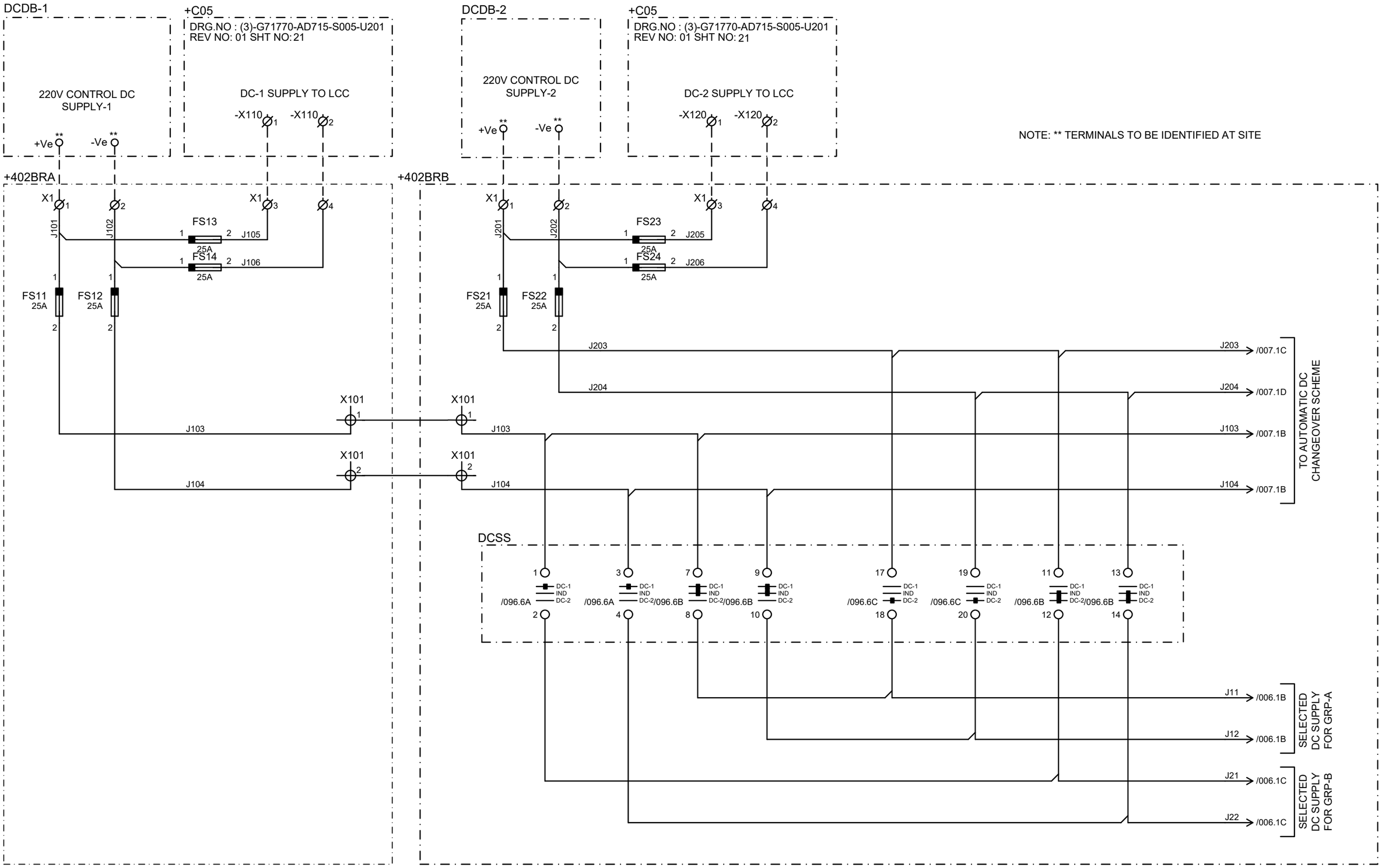

CUSTOMER : JALPURA KHURJA POWER TRANSMISSION LTD. (THE TATA POWER COMPANY LTD.) PROJECT : SUPPLY OF CRP & SAS AT 400/220kV METRO DEPOT GIS	CONTRACTOR : BAJEL PROJECTS LIMITED	Schneider Electric	TITLE : 400kV BUS REACTOR CONTROL & PROTN. PANEL (BAY-402) DC DISTRIBUTION CKT.	PREPARED : BG REVIEWED : BG APPROVED : RKK	REVISION: Z DATE: 21-04-2025	SHT :005 CONT: 006
PO. No.& Date : 6100001138 DATED: 28.04.2024			PANEL TYPE : +402BRA,+402BRB	DRG. NO.: I1-226736082-S-02		

This document is the exclusive property of Schneider Electric and shall not be used, copied or communicated to third parties without prior authorization.

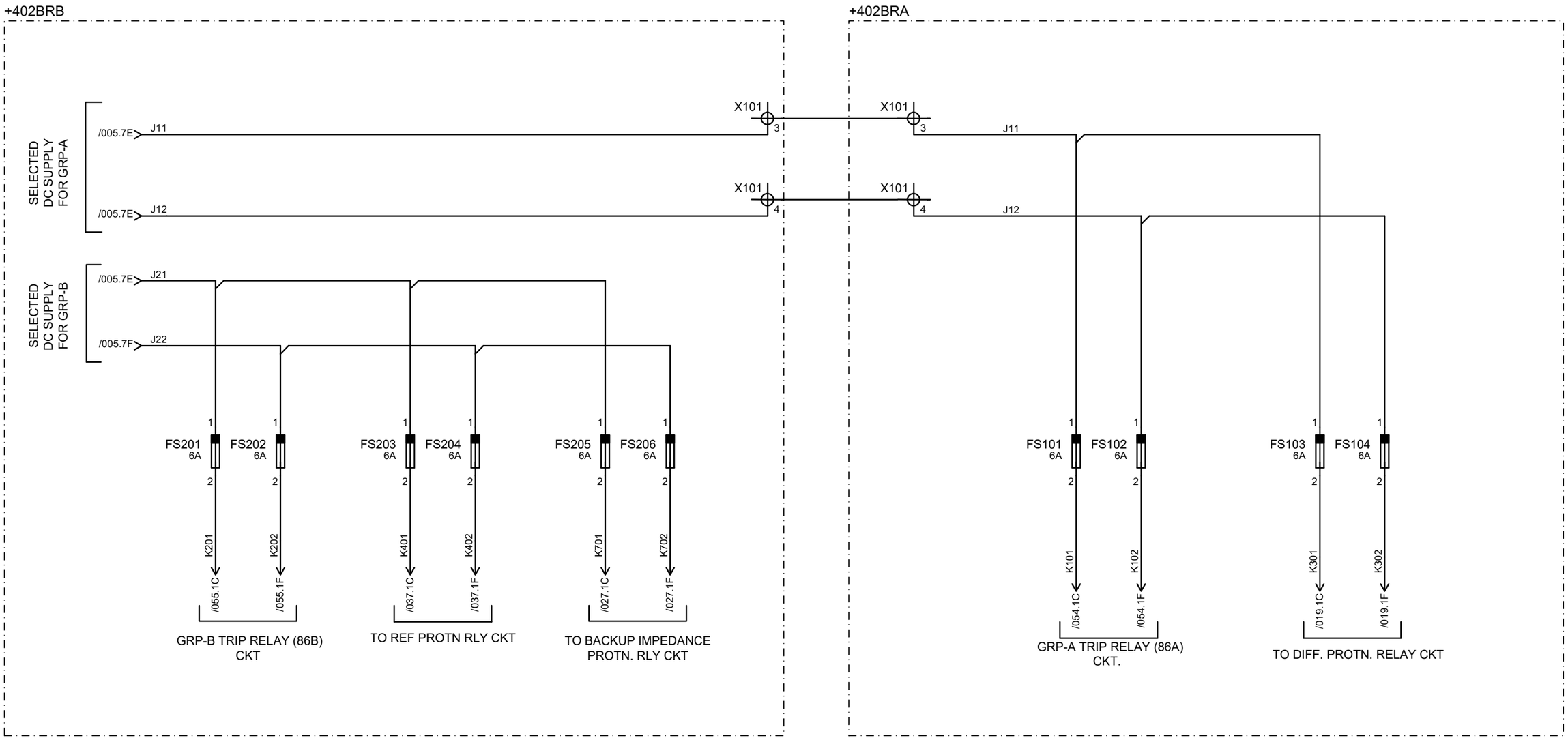

CUSTOMER : JALPURA KHURJA POWER TRANSMISSION LTD. (THE TATA POWER COMPANY LTD.) PROJECT : SUPPLY OF CRP & SAS AT 400/220kV METRO DEPOT GIS	CONTRACTOR : BAJEL PROJECTS LIMITED	Schneider Electric	TITLE : 400kV BUS REACTOR CONTROL & PROTN. PANEL (BAY-402) DC DISTRIBUTION CKT.	PREPARED : BG REVIEWED : BG APPROVED : RKK	REVISION: Z DATE: 21-04-2025	SHT :006 CONT: 007
PO. No.& Date : 6100001138 DATED: 28.04.2024			PANEL TYPE : +402BRA,+402BRB	DRG. NO.: I1-226736082-S-02		

This document is the exclusive property of Schneider Electric and shall not be used, copied or communicated to third parties without prior authorization.

This document is the exclusive property of Schneider Electric and shall not be used, copied or communicated to third parties without prior authorization.

+402BRB

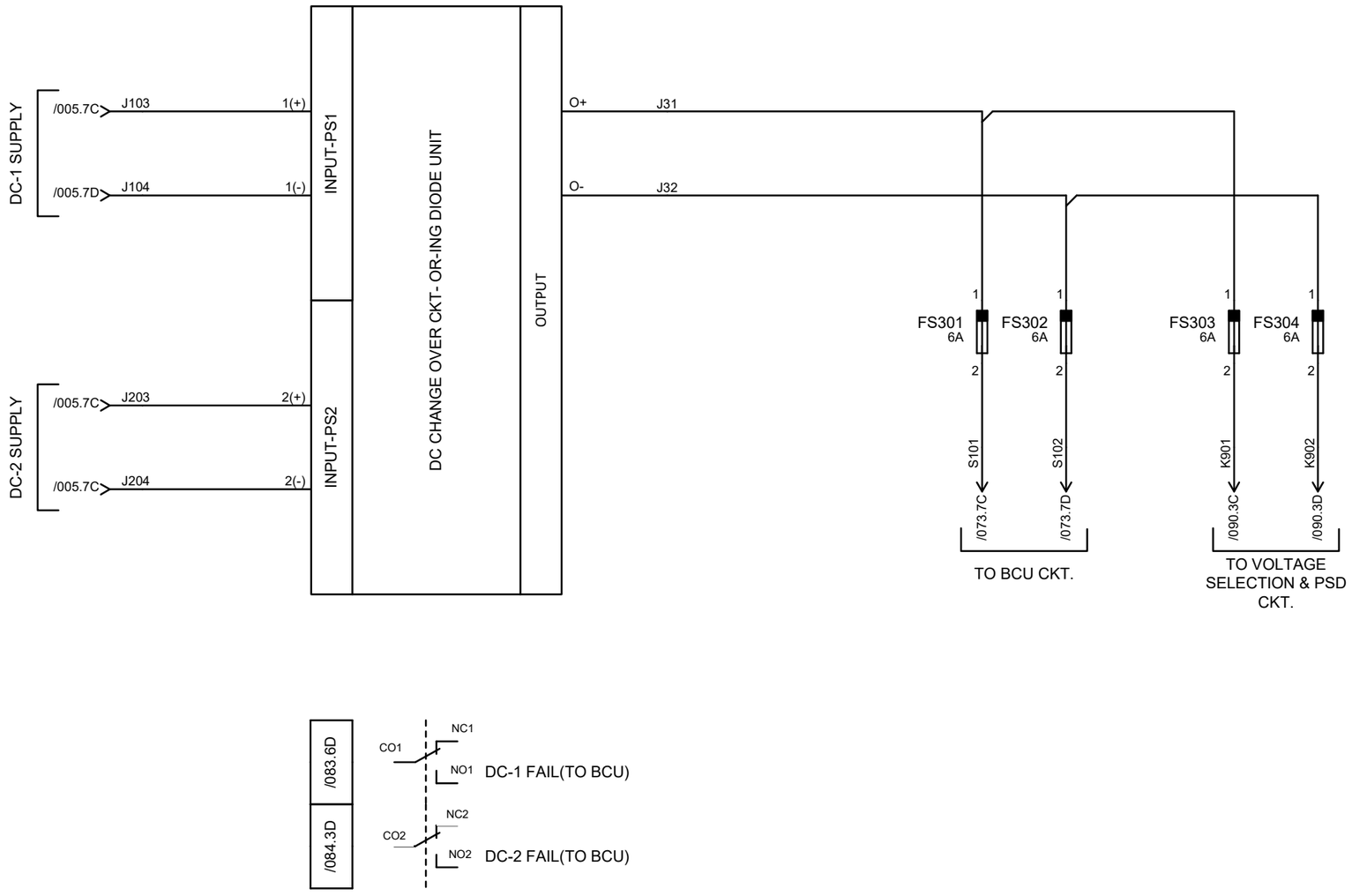

CUSTOMER : JALPURA KHURJA POWER TRANSMISSION LTD. (THE TATA POWER COMPANY LTD.) PROJECT : SUPPLY OF CRP & SAS AT 400/220kV METRO DEPOT GIS	CONTRACTOR : BAJEL PROJECTS LIMITED	Schneider Electric	TITLE : 400kV BUS REACTOR CONTROL & PROTN. PANEL (BAY-402) DC CHANGEOVER SCHEME	PREPARED : BG REVIEWED : BG APPROVED : RKK	REVISION: Z DATE: 21-04-2025	SHT :007 CONT: 008
PO. No.& Date : 6100001138 DATED: 28.04.2024			PANEL TYPE : +402BRA,+402BRB	DRG. NO.: I1-226736082-S-02		

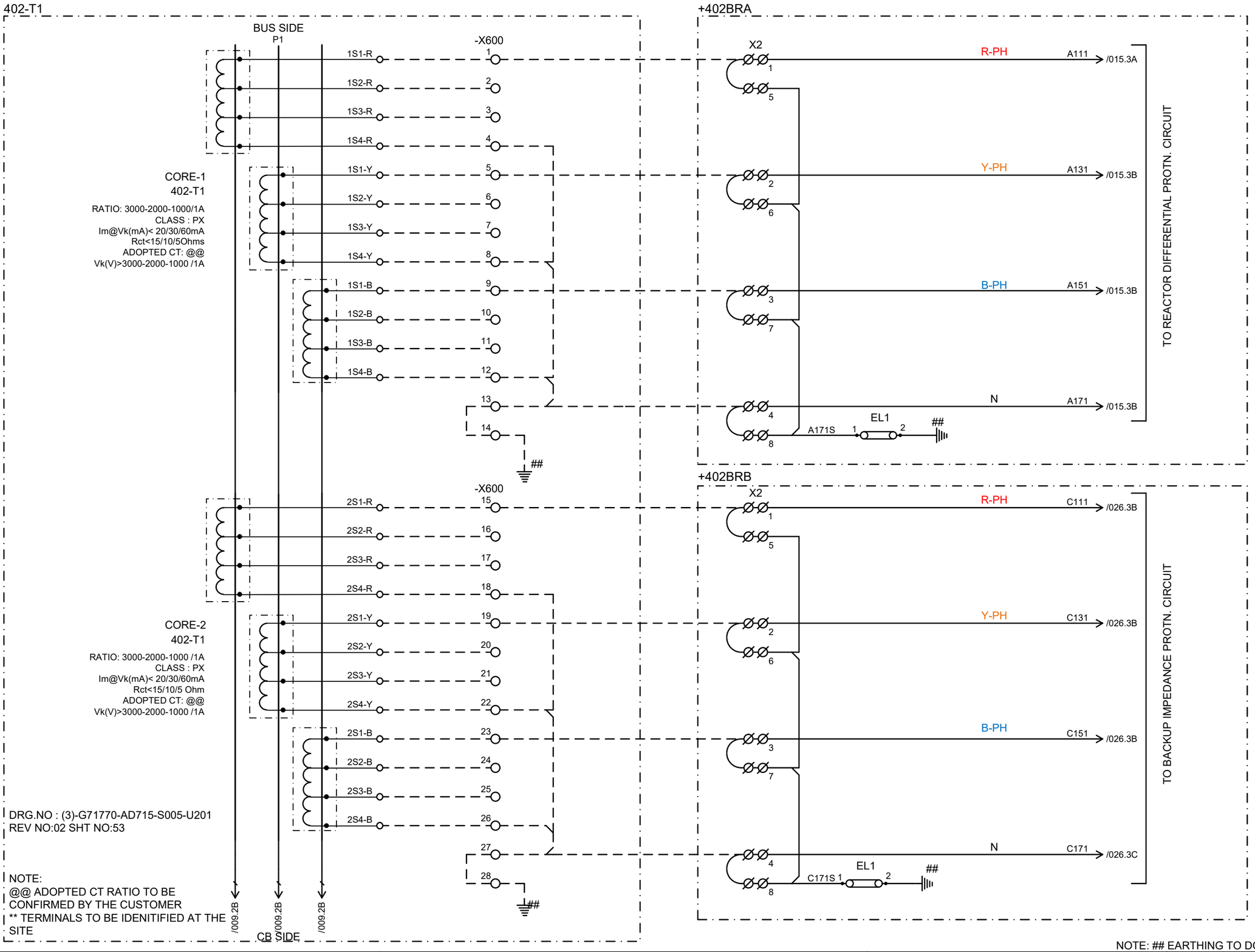

NOTE: ## EARTHING TO DONE EITHER AT CRP OR LCC PANEL

CUSTOMER : JALPURA KHURJA POWER TRANSMISSION LTD. (THE TATA POWER COMPANY LTD.) PROJECT : SUPPLY OF CRP & SAS AT 400/220kV METRO DEPOT GIS	CONTRACTOR : BAJEL PROJECTS LIMITED	Schneider Electric	TITLE : 400kV BUS REACTOR CONTROL & PROTN. PANEL (BAY-402) CT DISTRIBUTION CIRCUIT	PREPARED : BG REVISION: Z SHT :008
				REVIEWED : BG DATE: 21-04-2025 CONT: 009
PO. No.& Date : 6100001138 DATED: 28.04.2024			PANEL TYPE : +402BRA,+402BRB	APPROVED : RKK DRG. NO.: I1-226736082-S-02

This document is the exclusive property of Schneider Electric and shall not be used, copied or communicated to third parties without prior authorization.

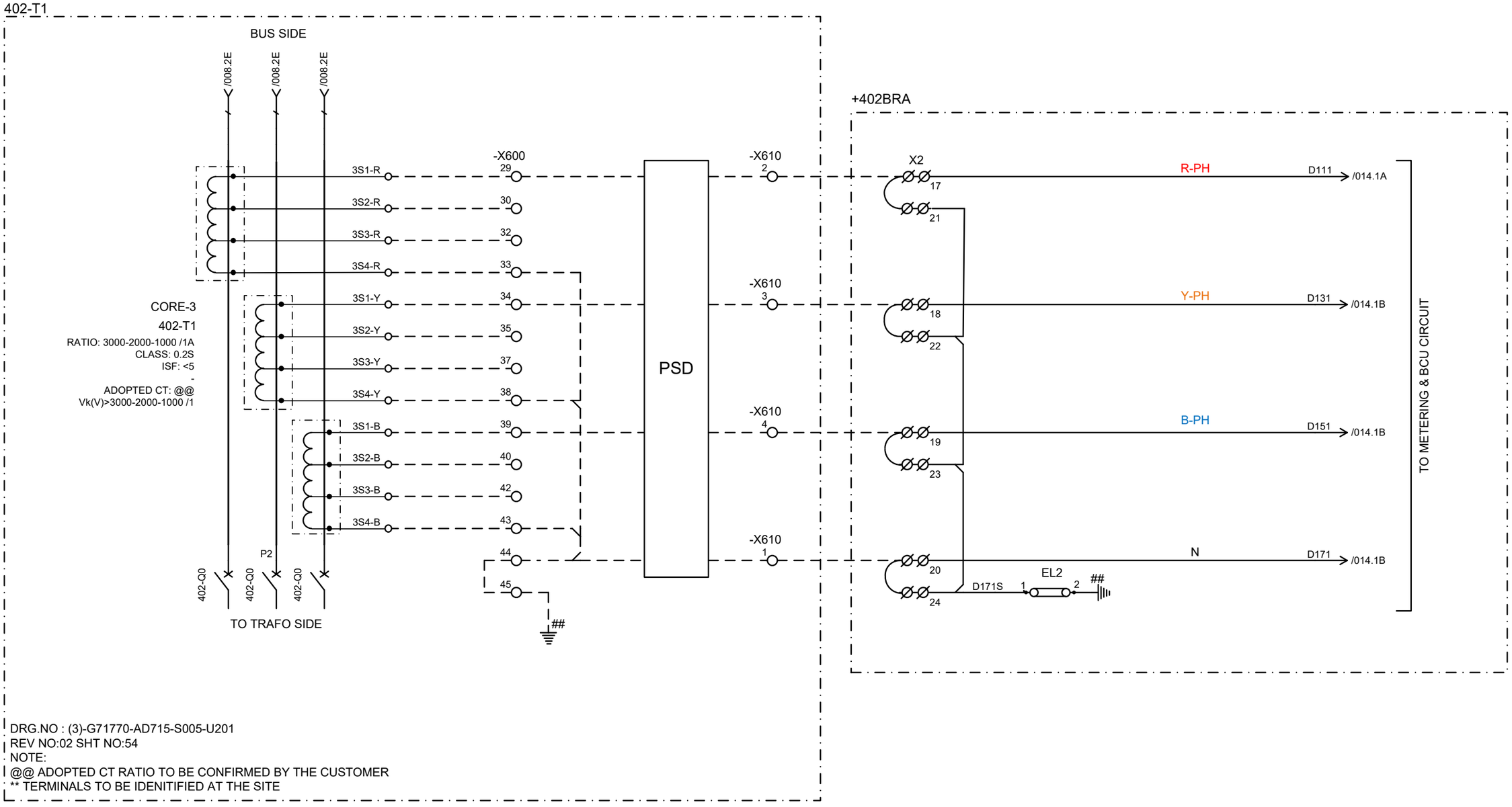

DRG.NO : (3)-G71770-AD715-S005-U201
REV NO:02 SHT NO:54
NOTE:
@@ ADOPTED CT RATIO TO BE CONFIRMED BY THE CUSTOMER
** TERMINALS TO BE IDENITIFIED AT THE SITE

NOTE: ## EARTHING TO DONE EITHER AT CRP OR LCC PANEL

CUSTOMER : JALPURA KHURJA POWER TRANSMISSION LTD. (THE TATA POWER COMPANY LTD.) PROJECT : SUPPLY OF CRP & SAS AT 400/220kV METRO DEPOT GIS	CONTRACTOR : BAJEL PROJECTS LIMITED	Schneider Electric	TITLE : 400kV BUS REACTOR CONTROL & PROTN. PANEL (BAY-402) CT DISTRIBUTION CIRCUIT	PREPARED : BG REVIEWED : BG APPROVED : RKK	REVISION: Z DATE: 21-04-2025	SHT :009 CONT: 010
PO. No.& Date : 6100001138 DATED: 28.04.2024			PANEL TYPE : +402BRA,+402BRB	DRG. NO.: I1-226736082-S-02		

This document is the exclusive property of Schneider Electric and shall not be used, copied or communicated to third parties without prior authorization.

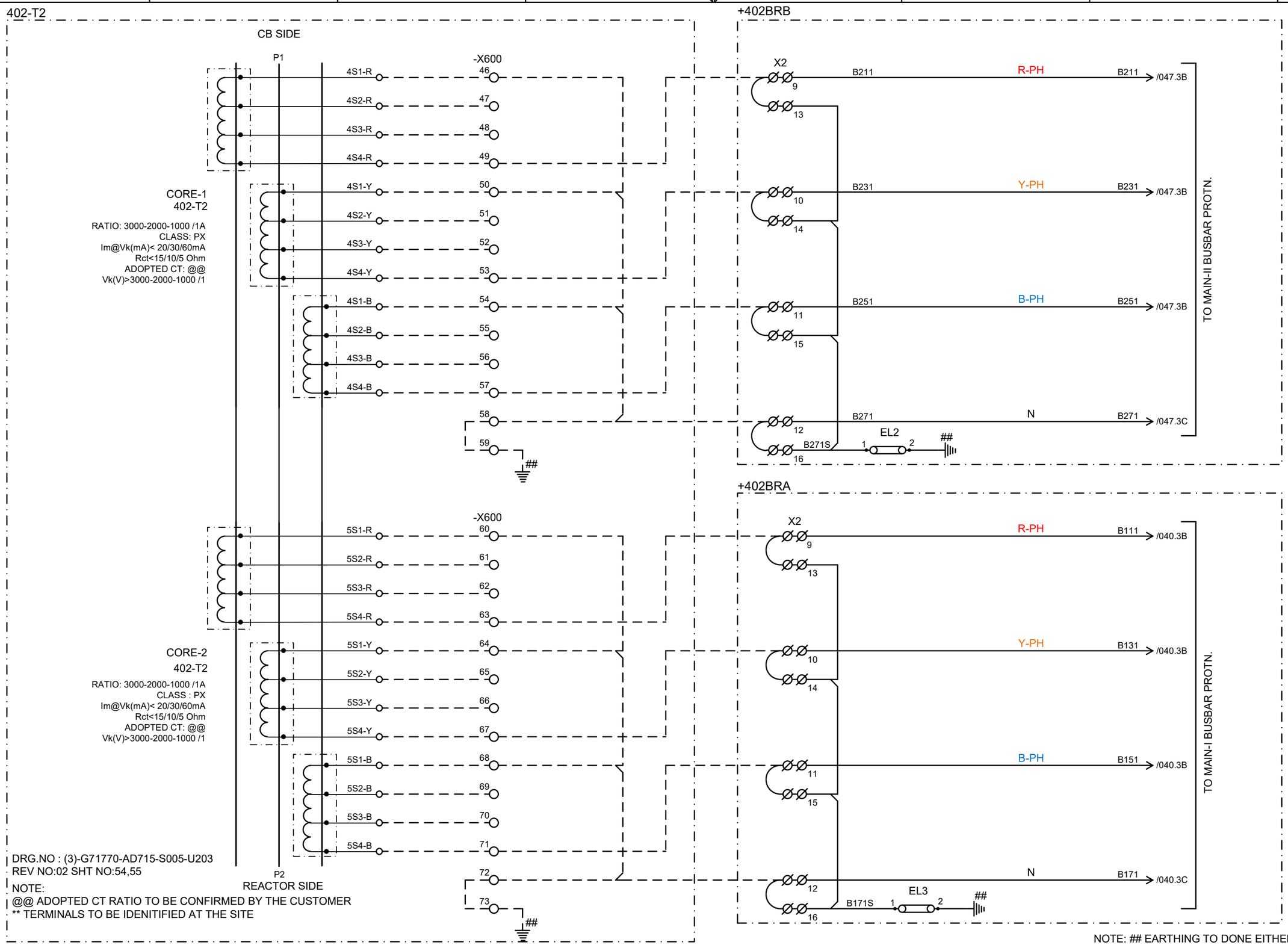

DRG.NO : (3)-G71770-AD715-S005-U203
REV NO:02 SHT NO:54,55

NOTE:
@@ ADOPTED CT RATIO TO BE CONFIRMED BY THE CUSTOMER
** TERMINALS TO BE IDENITIFIED AT THE SITE

NOTE: ## EARTHING TO DONE EITHER AT CRP OR LCC PANEL

CUSTOMER : JALPURA KHURJA POWER TRANSMISSION LTD. (THE TATA POWER COMPANY LTD.) PROJECT : SUPPLY OF CRP & SAS AT 400/220kV METRO DEPOT GIS	CONTRACTOR : BAJEL PROJECTS LIMITED	TITLE : 400kV BUS REACTOR CONTROL & PROTN. PANEL (BAY-402) CT DISTRIBUTION CIRCUIT	PREPARED : BG REVISION: Z SHT :010
PO. No.& Date : 6100001138 DATED: 28.04.2024			REVIEWED : BG DATE: 21-04-2025 CONT: 011
		PANEL TYPE : +402BRA,+402BRB	APPROVED : RKK DRG. NO.: I1-226736082-S-02

This document is the exclusive property of Schneider Electric and shall not be used, copied or communicated to third parties without prior authorization.

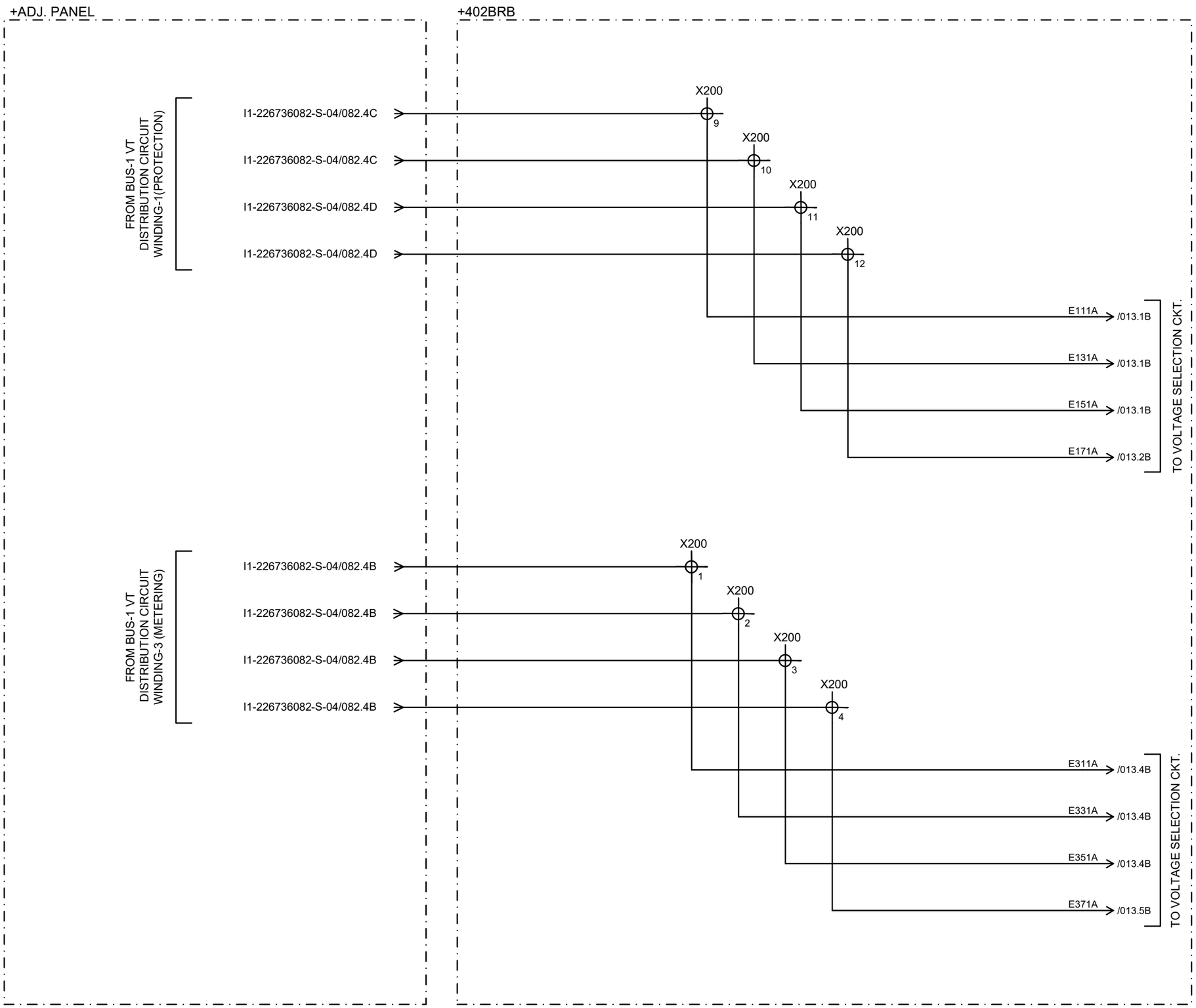

This document is the exclusive property of Schneider Electric and shall not be used, copied or communicated to third parties without prior authorization.

CUSTOMER : JALPURA KHURJA POWER TRANSMISSION LTD. (THE TATA POWER COMPANY LTD.) PROJECT : SUPPLY OF CRP & SAS AT 400/220kV METRO DEPOT GIS	CONTRACTOR : BAJEL PROJECTS LIMITED	Schneider Electric	TITLE : 400kV BUS REACTOR CONTROL & PROTN. PANEL (BAY-402) BUS-1 CVT DISTRIBUTION CKT.	PREPARED : BG REVIEWED : BG APPROVED : RKK	REVISION: Z DATE: 21-04-2025	SHT :011 CONT:012
PO. No.& Date : 6100001138 DATED: 28.04.2024			PANEL TYPE : +402BRA,+402BRB	DRG. NO.: I1-226736082-S-02		

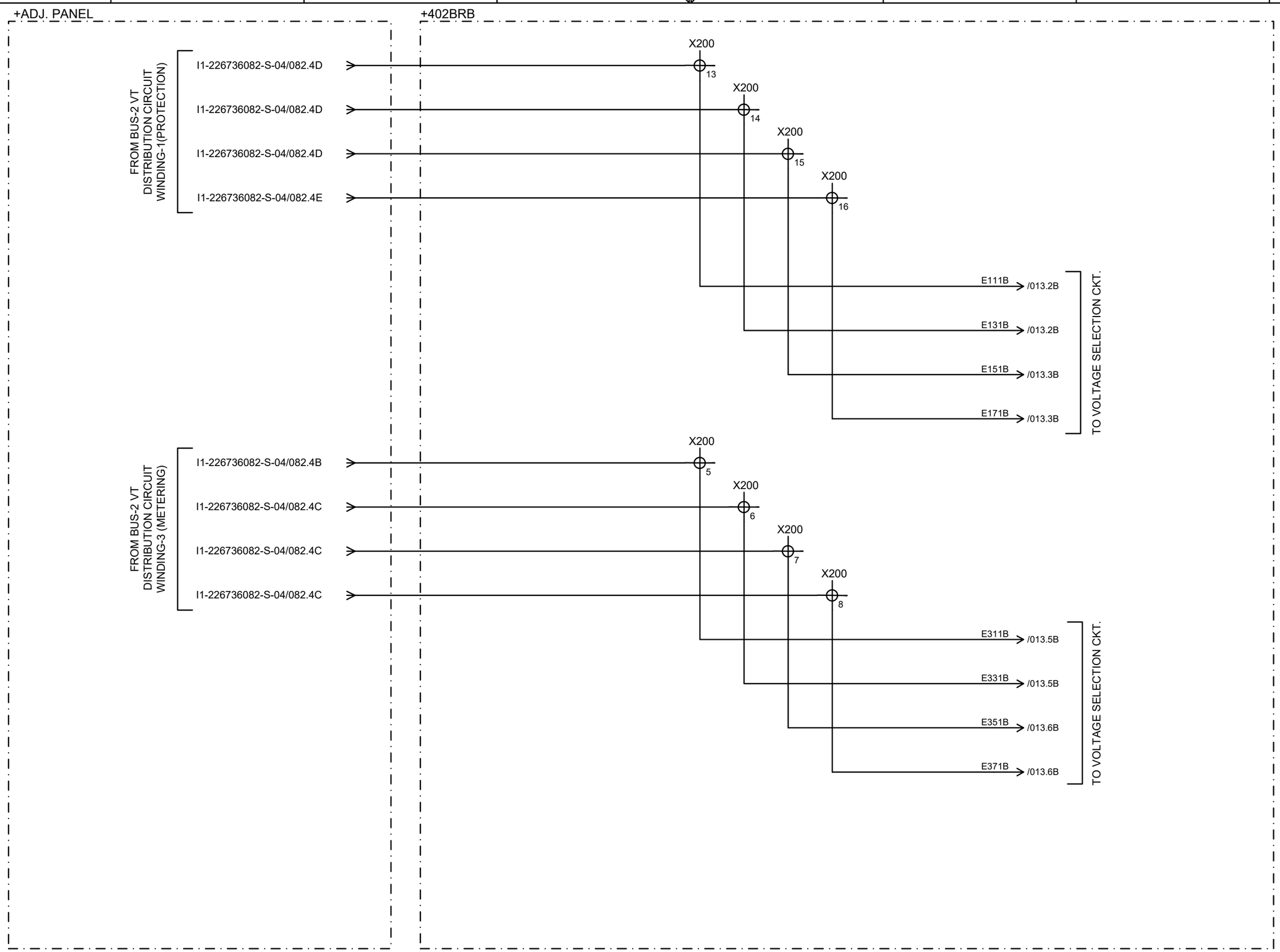

CUSTOMER : JALPURA KHURJA POWER TRANSMISSION LTD. (THE TATA POWER COMPANY LTD.) PROJECT : SUPPLY OF CRP & SAS AT 400/220kV METRO DEPOT GIS	CONTRACTOR : BAJEL PROJECTS LIMITED	Schneider Electric	TITLE : 400kV BUS REACTOR CONTROL & PROTN. PANEL (BAY-402) BUS-2 CVT DISTRIBUTION CKT.	PREPARED : BG REVIEWED : BG APPROVED : RKK	REVISION: Z DATE: 21-04-2025	SHT :012 CONT: 013
PO. No.& Date : 6100001138 DATED: 28.04.2024			PANEL TYPE : +402BRA,+402BRB	DRG. NO.: I1-226736082-S-02		

This document is the exclusive property of Schneider Electric and shall not be used, copied or communicated to third parties without prior authorization.

This document is the exclusive property of Schneider Electric and shall not be used, copied or communicated to third parties without prior authorization.

400kV BUS-1 PROTN. CORE-1 VT SUPPLY	400kV BUS-2 PROTN. CORE-1 VT SUPPLY	400kV BUS-1 METERING CORE-3 VT SUPPLY	400kV BUS-2 METERING CORE-3 VT SUPPLY

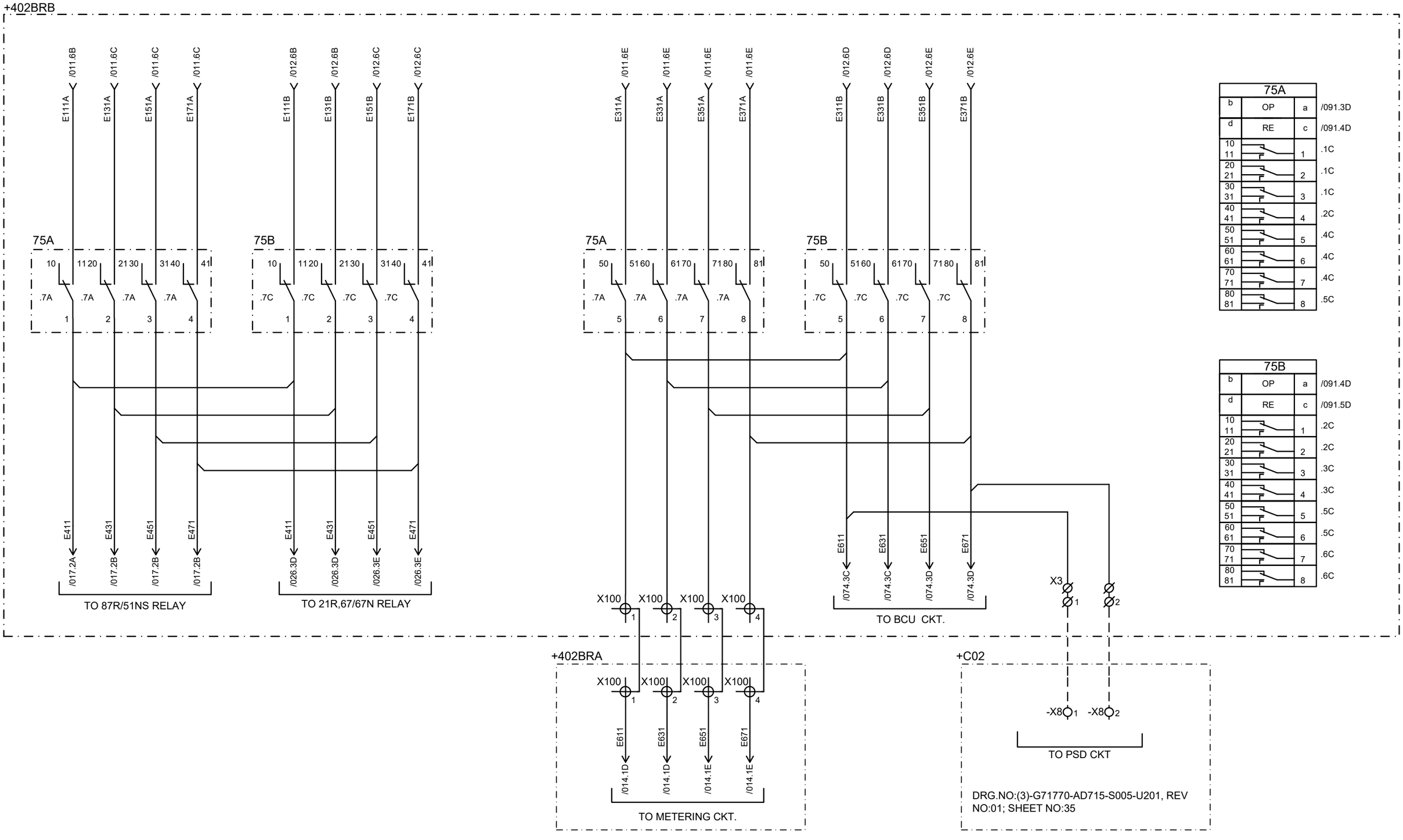

CUSTOMER : JALPURA KHURJA POWER TRANSMISSION LTD. (THE TATA POWER COMPANY LTD.) PROJECT : SUPPLY OF CRP & SAS AT 400/220kV METRO DEPOT GIS	CONTRACTOR : BAJEL PROJECTS LIMITED	Schneider Electric	TITLE : 400kV BUS REACTOR CONTROL & PROTN. PANEL (BAY-402) VOLTAGE SELECTION CIRCUIT	PREPARED : BG REVIEWED : BG APPROVED : RKK	REVISION: Z DATE: 21-04-2025	SHT :013 CONT: 014
PO. No.& Date : 6100001138 DATED: 28.04.2024			PANEL TYPE : +402BRA,+402BRB	DRG. NO.: I1-226736082-S-02		

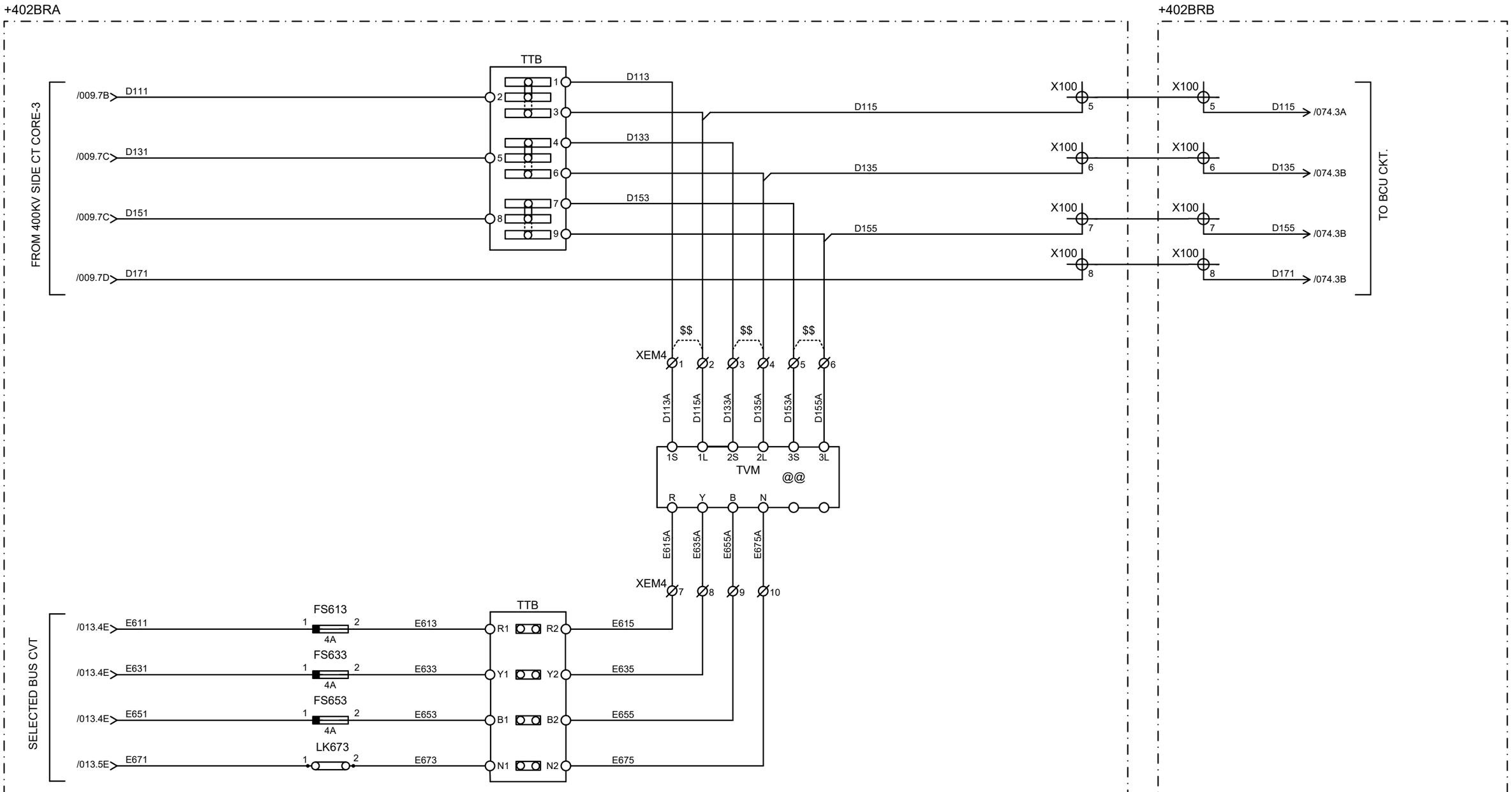

NOTE:-
1)@@ TVM IS NOT IN SEIL SCOPE OF SUPPLY
2) $$ SHORTING LEADS TO BE REMOVED WHEN TVM METER IS CONNECTED

CUSTOMER : JALPURA KHURJA POWER TRANSMISSION LTD. (THE TATA POWER COMPANY LTD.) PROJECT : SUPPLY OF CRP & SAS AT 400/220kV METRO DEPOT GIS	CONTRACTOR : BAJEL PROJECTS LIMITED	Schneider Electric	TITLE : 400kV BUS REACTOR CONTROL & PROTN. PANEL (BAY-402) METERING CIRCUIT	PREPARED : BG REVIEWED : BG APPROVED : RKK	REVISION: Z DATE: 21-04-2025	SHT : 014 CONT: 015
PO. No.& Date : 6100001138 DATED: 28.04.2024			PANEL TYPE : +402BRA,+402BRB	DRG. NO.: I1-226736082-S-02		

This document is the exclusive property of Schneider Electric and shall not be used, copied or communicated to third parties without prior authorization.

This document is the exclusive property of Schneider Electric and shall not be used, copied or communicated to third parties without prior authorization.

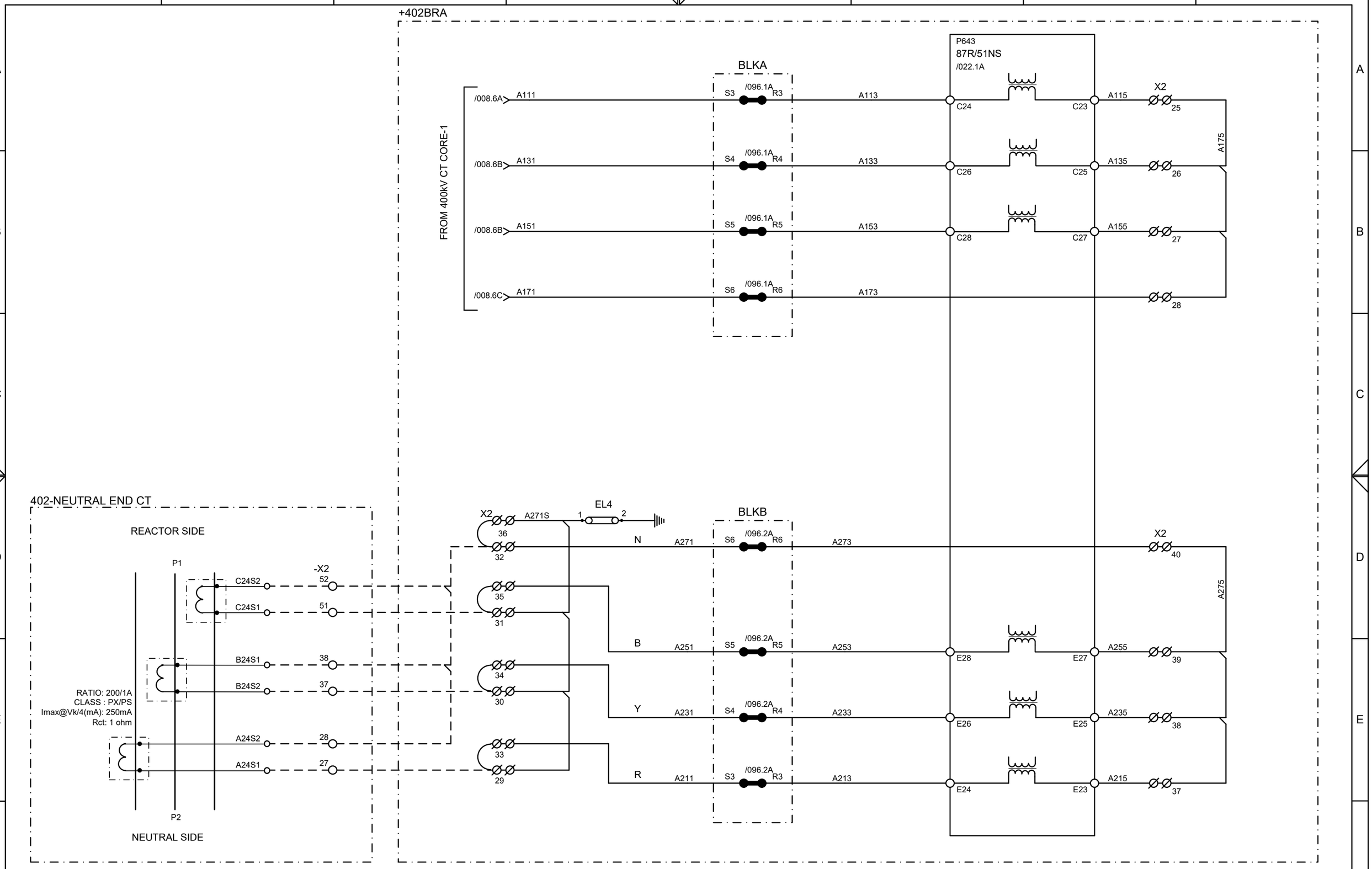

CUSTOMER : JALPURA KHURJA POWER TRANSMISSION LTD. (THE TATA POWER COMPANY LTD.) PROJECT : SUPPLY OF CRP & SAS AT 400/220kV METRO DEPOT GIS	CONTRACTOR : BAJEL PROJECTS LIMITED	Schneider Electric	TITLE : 400kV BUS REACTOR CONTROL & PROTN. PANEL (BAY-402) DIFF.PROTN.-CT CKT.
PO. No.& Date : 6100001138 DATED: 28.04.2024			PANEL TYPE : +402BRA,+402BRB

PREPARED : BG	REVISION: Z	SHT :015
REVIEWED : BG	DATE: 21-04-2025	CONT:016
APPROVED : RKK		
DRG. NO.: I1-226736082-S-02		

+402BRA

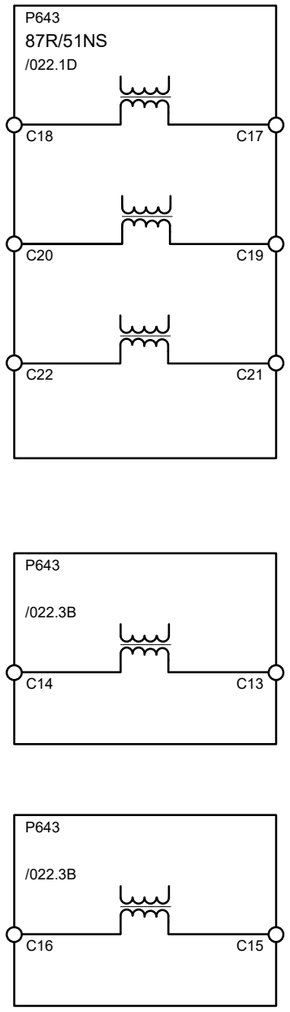

CUSTOMER : JALPURA KHURJA POWER TRANSMISSION LTD. (THE TATA POWER COMPANY LTD.) PROJECT : SUPPLY OF CRP & SAS AT 400/220kV METRO DEPOT GIS	CONTRACTOR : BAJEL PROJECTS LIMITED	Schneider Electric	TITLE : 400kV BUS REACTOR CONTROL & PROTN. PANEL (BAY-402) DIFF.PROTN.-CT CKT.	PREPARED : BG REVIEWED : BG APPROVED : RKK	REVISION: Z DATE: 21-04-2025	SHT :016 CONT: 017
PO. No.& Date : 6100001138 DATED: 28.04.2024			PANEL TYPE : +402BRA,+402BRB	DRG. NO.: I1-226736082-S-02		

This document is the exclusive property of Schneider Electric and shall not be used, copied or communicated to third parties without prior authorization.

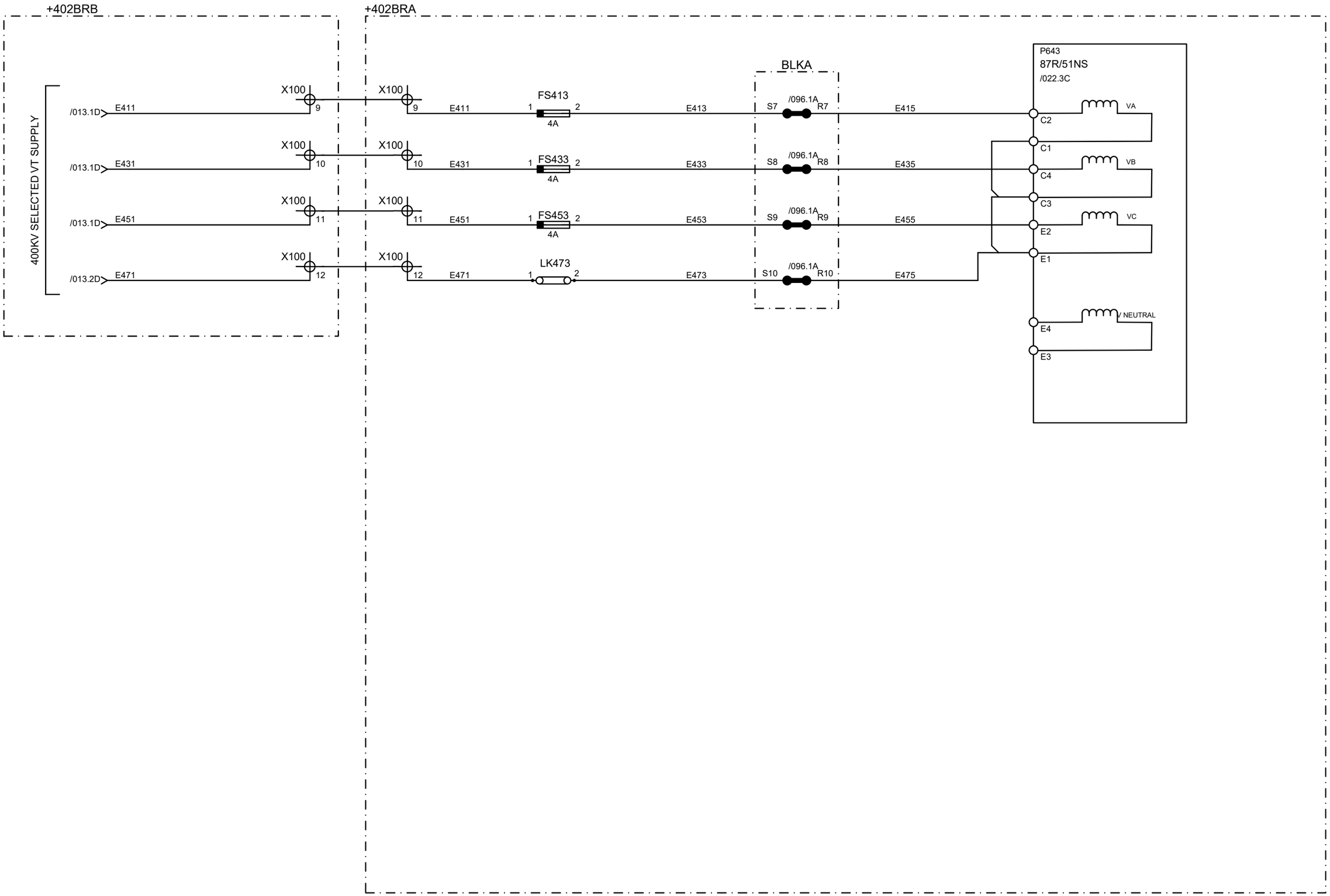

CUSTOMER : JALPURA KHURJA POWER TRANSMISSION LTD. (THE TATA POWER COMPANY LTD.) PROJECT : SUPPLY OF CRP & SAS AT 400/220kV METRO DEPOT GIS	CONTRACTOR : BAJEL PROJECTS LIMITED	Schneider Electric	TITLE : 400kV BUS REACTOR CONTROL & PROTN. PANEL (BAY-402) DIFF.PROTN.-VT CKT.	PREPARED : BG REVIEWED : BG APPROVED : RKK	REVISION: Z DATE: 21-04-2025	SHT :017 CONT: 018
PO. No.& Date : 6100001138 DATED: 28.04.2024			PANEL TYPE : +402BRA,+402BRB	DRG. NO.: I1-226736082-S-02		

This document is the exclusive property of Schneider Electric and shall not be used, copied or communicated to third parties without prior authorization.

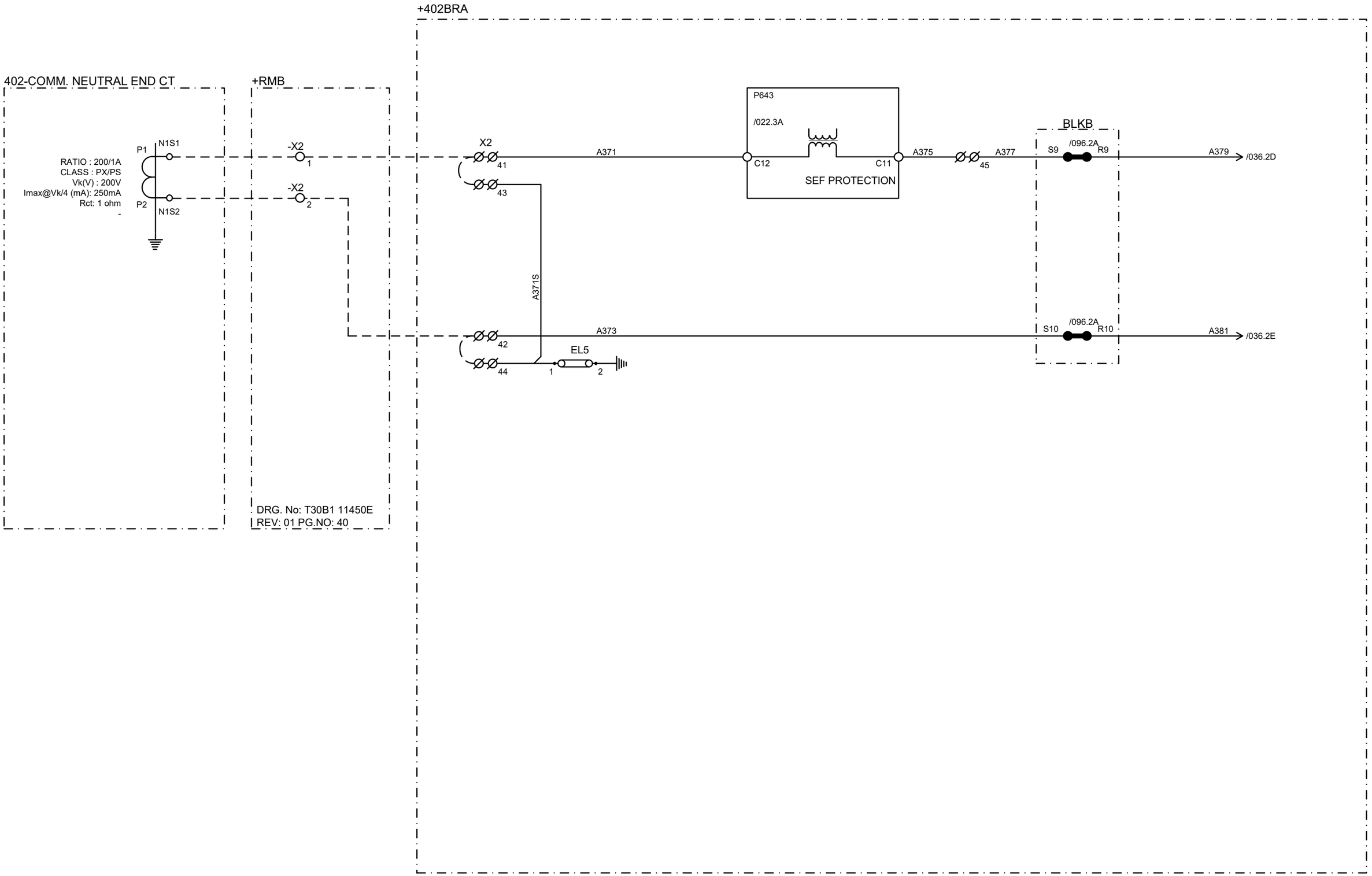

CUSTOMER : JALPURA KHURJA POWER TRANSMISSION LTD. (THE TATA POWER COMPANY LTD.) PROJECT : SUPPLY OF CRP & SAS AT 400/220kV METRO DEPOT GIS	CONTRACTOR : BAJEL PROJECTS LIMITED	Schneider Electric	TITLE : 400kV BUS REACTOR CONTROL & PROTN. PANEL (BAY-402) DIFF.PROTN.-VT CKT.	PREPARED : BG REVIEWED : BG APPROVED : RKK	REVISION: Z DATE: 21-04-2025	SHT : 018 CONT: 019
PO. No.& Date : 6100001138 DATED: 28.04.2024			PANEL TYPE : +402BRA,+402BRB	DRG. NO.: I1-226736082-S-02		

This document is the exclusive property of Schneider Electric and shall not be used, copied or communicated to third parties without prior authorization.

This document is the exclusive property of Schneider Electric and shall not be used, copied or communicated to third parties without prior authorization.

400KV CB OPEN	SPARE	GRP-A TRIP RELAY (86A) OPTD	LBB PROTN OPTD PU-A	BB/LBB TRIP RLY(96A) OPTD.	SPARE	SPARE	SPARE

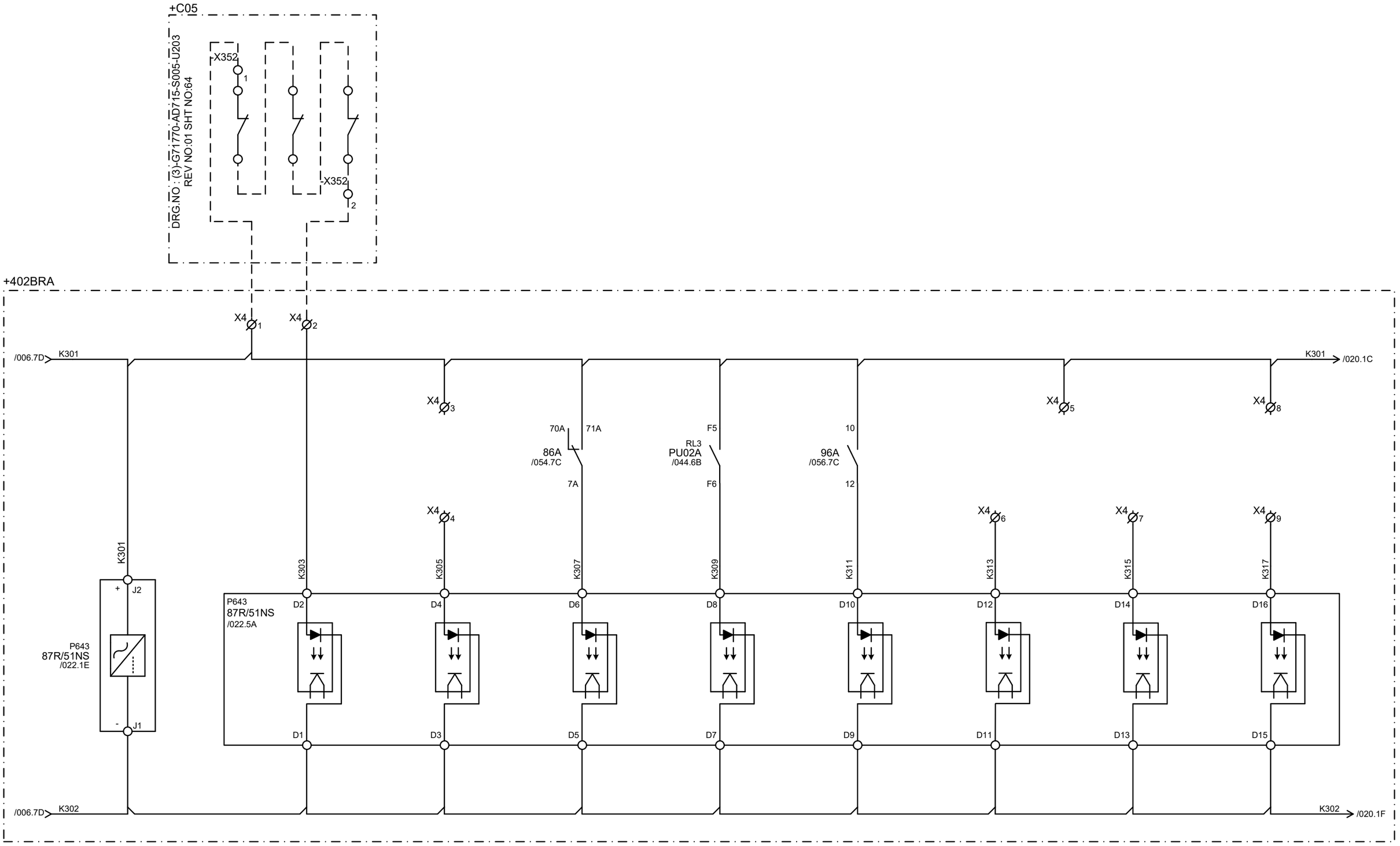

CUSTOMER : JALPURA KHURJA POWER TRANSMISSION LTD. (THE TATA POWER COMPANY LTD.) PROJECT : SUPPLY OF CRP & SAS AT 400/220kV METRO DEPOT GIS	CONTRACTOR : BAJEL PROJECTS LIMITED	Schneider Electric	TITLE : 400kV BUS REACTOR CONTROL & PROTN. PANEL (BAY-402) DIFF.PROTN.-OPTO CKT.	PREPARED : BG REVIEWED : BG APPROVED : RKK	REVISION: Z DATE: 21-04-2025	SHT :019 CONT: 020
PO. No.& Date : 6100001138 DATED: 28.04.2024			PANEL TYPE : +402BRA,+402BRB	DRG. NO.: I1-226736082-S-02		

This document is the exclusive property of Schneider Electric and shall not be used, copied or communicated to third parties without prior authorization.

BUCHHOLZ RELAY-1 TRIP	WTI TRIP	SPR TRIP	21T/HV-67/67N FAULTY	64R RLY FAULTY	BUCHHOLZ RELAY ALARM	WINDING TEMP. HIGH ALARM	AIR CELL LEAK DETECTOR

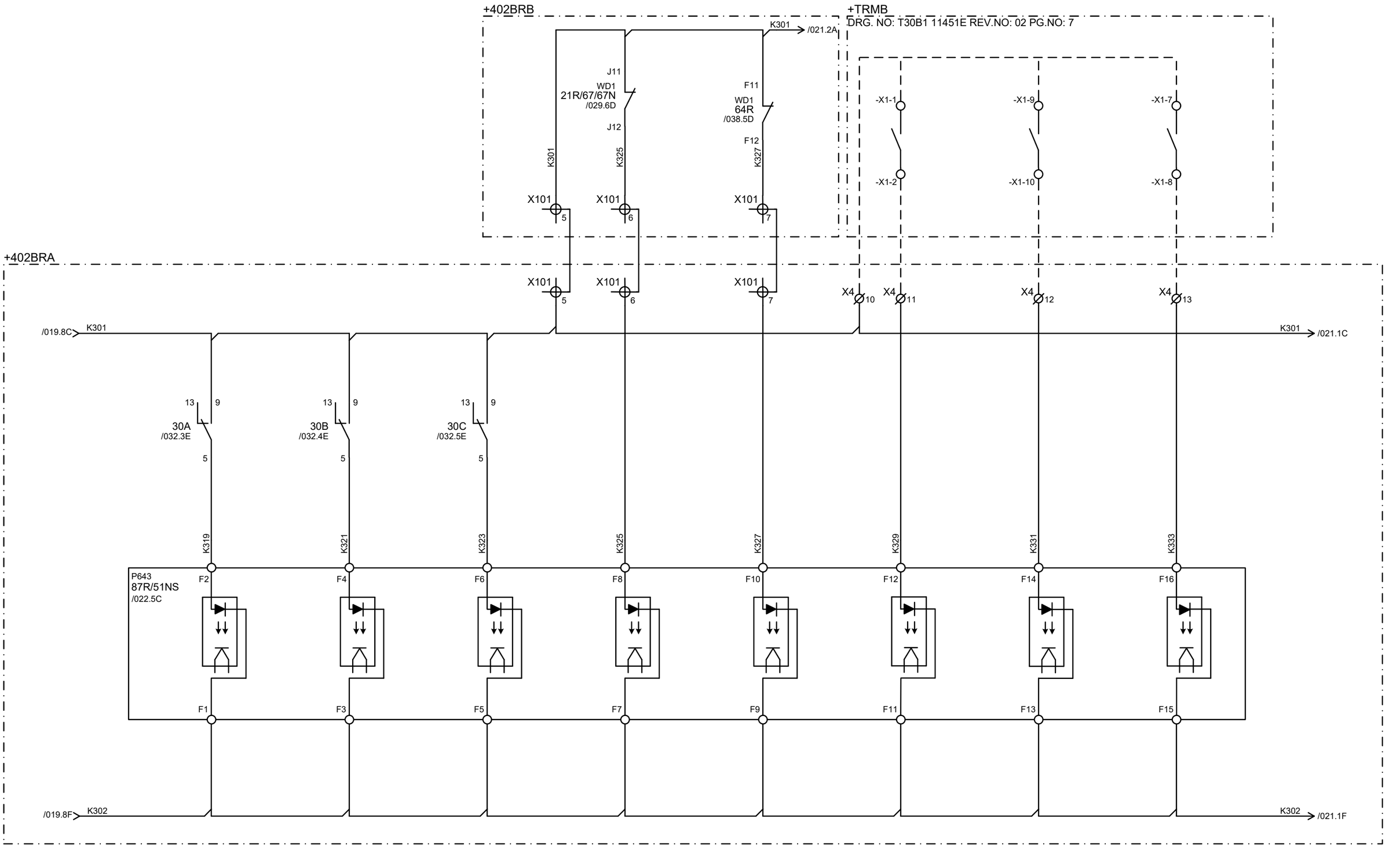

CUSTOMER : JALPURA KHURJA POWER TRANSMISSION LTD. (THE TATA POWER COMPANY LTD.) PROJECT : SUPPLY OF CRP & SAS AT 400/220kV METRO DEPOT GIS	CONTRACTOR : BAJEL PROJECTS LIMITED	Schneider Electric	TITLE : 400kV BUS REACTOR CONTROL & PROTN. PANEL (BAY-402) DIFF.PROTN.-OPTO CKT.	PREPARED : BG REVIEWED : BG APPROVED : RKK	REVISION: Z DATE: 21-04-2025	SHT :020 CONT: 021
PO. No.& Date : 6100001138 DATED: 28.04.2024			PANEL TYPE : +402BRA,+402BRB	DRG. NO.: I1-226736082-S-02		

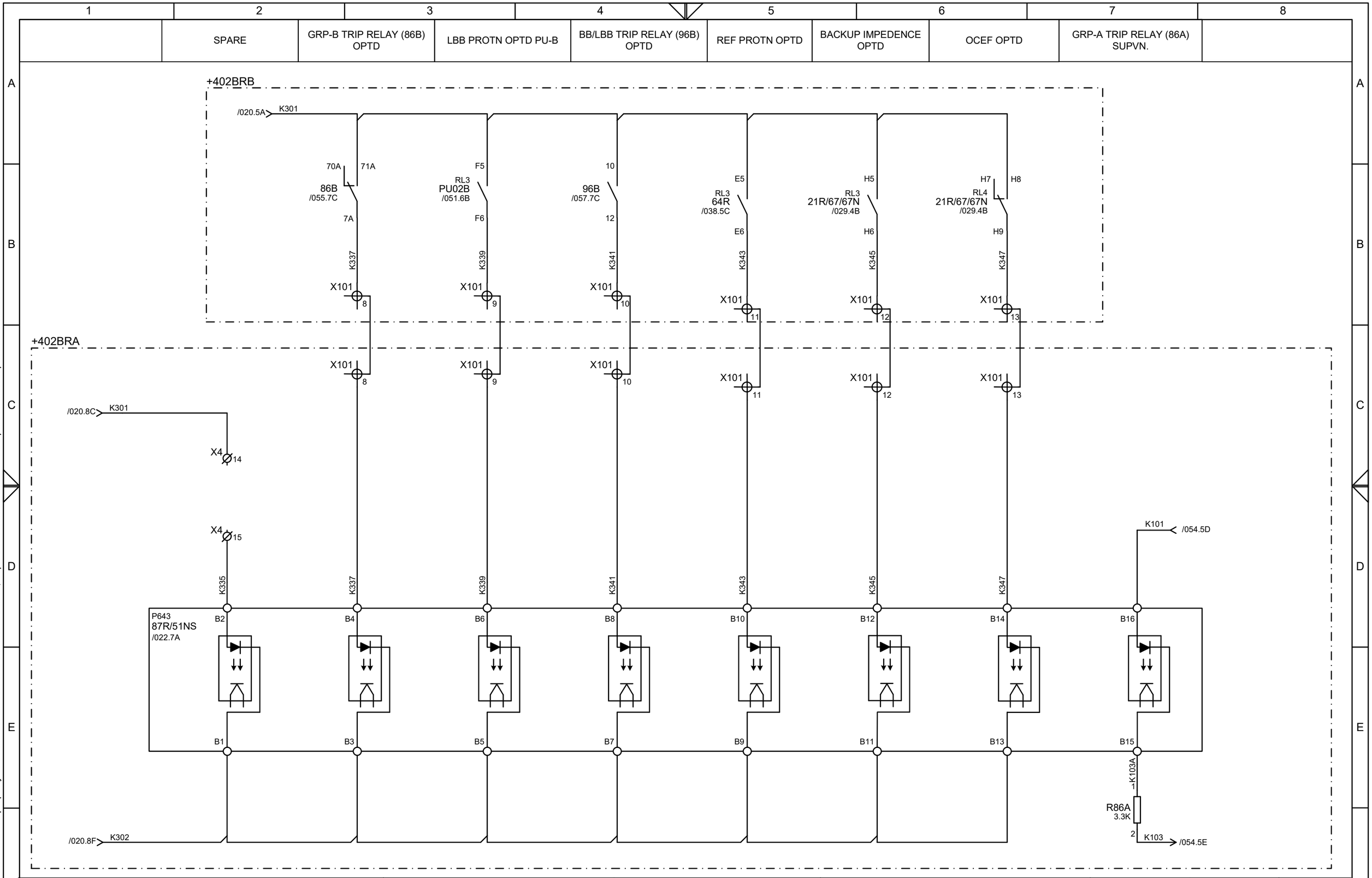

CUSTOMER : JALPURA KHURJA POWER TRANSMISSION LTD. (THE TATA POWER COMPANY LTD.) PROJECT : SUPPLY OF CRP & SAS AT 400/220kV METRO DEPOT GIS	CONTRACTOR : BAJEL PROJECTS LIMITED	Schneider Electric	TITLE : 400kV BUS REACTOR CONTROL & PROTN. PANEL (BAY-402) DIFF.PROTN.-OPTO CKT.
PO. No.& Date : 6100001138 DATED: 28.04.2024			PANEL TYPE : +402BRA,+402BRB

PREPARED : BG	REVISION: Z	SHT :021
REVIEWED : BG	DATE: 21-04-2025	CONT: 022
APPROVED : RKK		
DRG. NO.: I1-226736082-S-02		

This document is the exclusive property of Schneider Electric and shall not be used, copied or communicated to third parties without prior authorization.

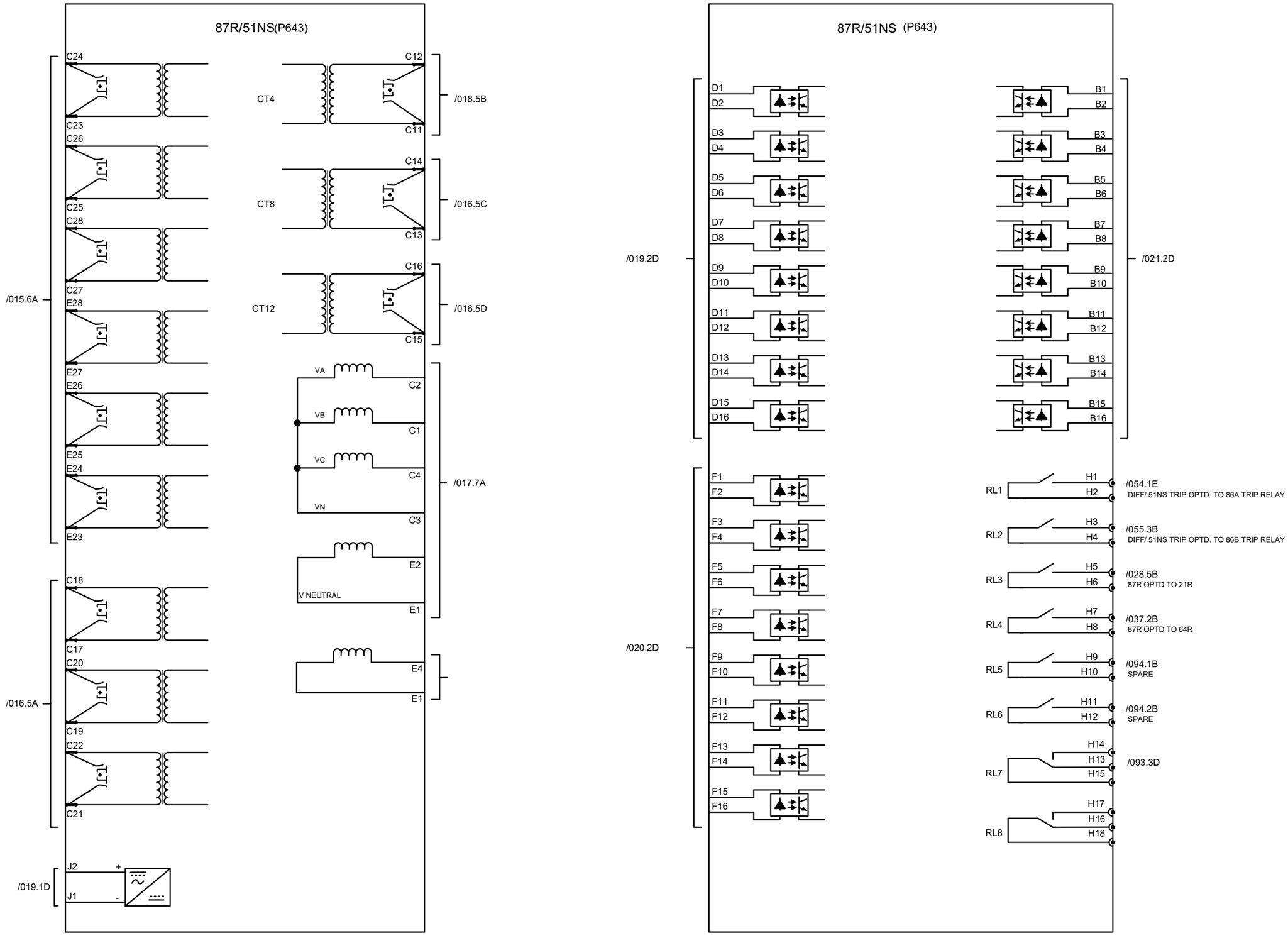

CUSTOMER : JALPURA KHURJA POWER TRANSMISSION LTD. (THE TATA POWER COMPANY LTD.) PROJECT : SUPPLY OF CRP & SAS AT 400/220kV METRO DEPOT GIS	CONTRACTOR : BAJEL PROJECTS LIMITED	Schneider Electric	TITLE : 400kV BUS REACTOR CONTROL & PROTN. PANEL (BAY-402) DIFF. RELAY (87R) CONTACT DISTRIBUTION	PREPARED : BG REVIEWED : BG APPROVED : RKK	REVISION: Z DATE: 21-04-2025	SHT :022 CONT: 023
PO. No.& Date : 6100001138 DATED: 28.04.2024			PANEL TYPE : +402BRA,+402BRB	DRG. NO.: I1-226736082-S-02		

This document is the exclusive property of Schneider Electric and shall not be used, copied or communicated to third parties without prior authorization.

+402BRA

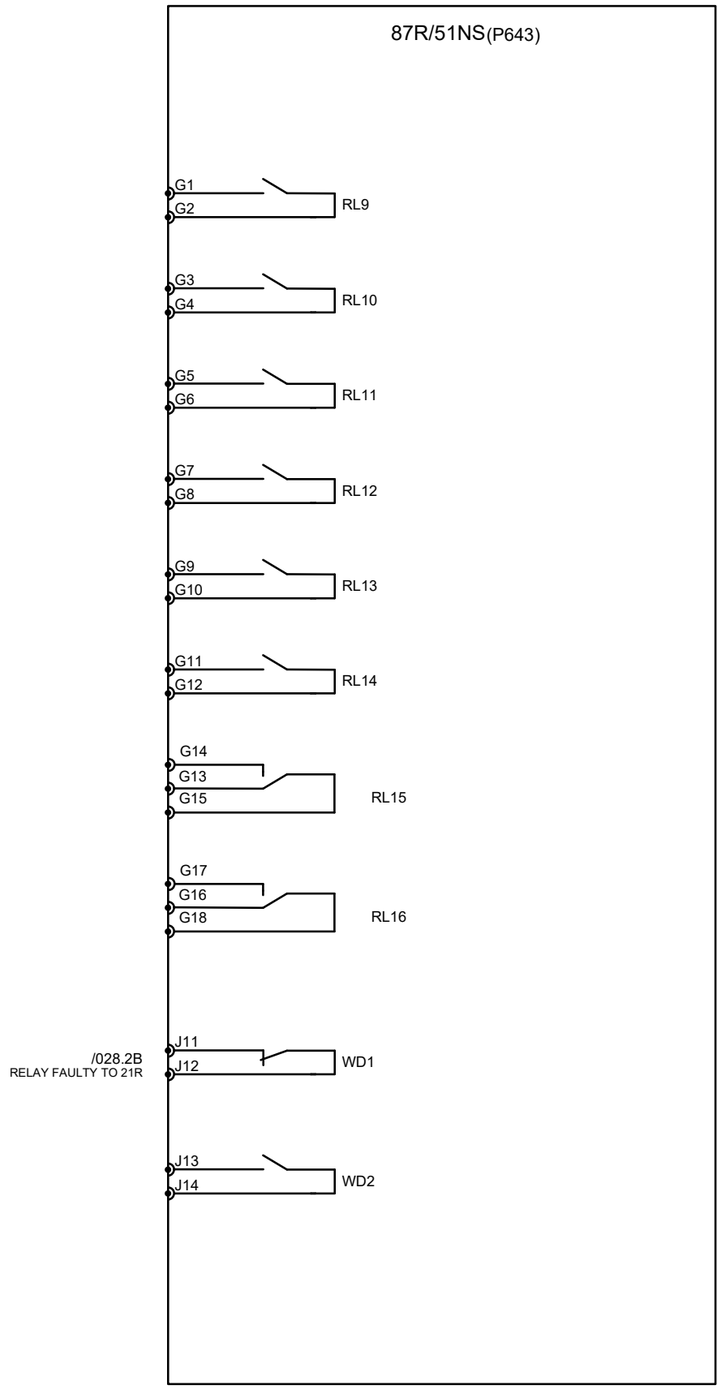

MiCOMP643 LED CONFIGURATION

- DIFF. PROTN. OPTD.
- SEF PROTN. OPTD.
- BUCH. ALARM
- WTI HIGH ALARM
- AIR CELL LEAK ALARM
- BUCH-1 TRIP
- WTI TRIP
- SPR TRIP
- SPARE
- SPARE
- SPARE
- SPARE

CUSTOMER : JALPURA KHURJA POWER TRANSMISSION LTD. (THE TATA POWER COMPANY LTD.) PROJECT : SUPPLY OF CRP & SAS AT 400/220kV METRO DEPOT GIS	CONTRACTOR : BAJEL PROJECTS LIMITED	Schneider Electric	TITLE : 400kV BUS REACTOR CONTROL & PROTN. PANEL (BAY-402) DIFF. RELAY (87R) CONTACT DISTRIBUTION	PREPARED : BG REVIEWED : BG APPROVED : RKK	REVISION: Z DATE: 21-04-2025	SHT :023 CONT: 024
PO. No.& Date : 6100001138 DATED: 28.04.2024			PANEL TYPE : +402BRA,+402BRB	DRG. NO.: I1-226736082-S-02		

This document is the exclusive property of Schneider Electric and shall not be used, copied or communicated to third parties without prior authorization.

SL.NO	STATUS (P643 RELAY)	OPTO INPUTS																							
		I/P-1	I/P-2	I/P-3	I/P-4	I/P-5	I/P-6	I/P-7	I/P-8	I/P-9	I/P-10	I/P-11	I/P-12	I/P-13	I/P-14	I/P-15	I/P-16	I/P-17	I/P-18	I/P-19	I/P-20	I/P-21	I/P-22	I/P-23	I/P-24
		FOR DR	SPARE	FOR DR	FOR DR	FOR DR	SPARE	SPARE	SPARE	FOR STATUS	FOR STATUS	FOR STATUS	FOR STATUS	FOR STATUS	FOR STATUS	FOR STATUS	FOR STATUS	SPARE	FOR STATUS	FOR STATUS	FOR STATUS	FOR STATUS	FOR STATUS	FOR STATUS	FOR SUPERVISION
01	400KV CB OPEN	✔																							
02	GRP-A TRIP RLY (86A) OPTD			✔																					
03	LBB OPTD FROM PU-A				✔																				
04	BB/LBB TRIP RLY (96A) OPTD					✔																			
05	BUCHHOLZ RELAY TRIP									✔															
06	WDG TEMP IND. HIGH TRIP										✔														
07	SPR TRIP											✔													
08	67/67N FAULTY												✔												
09	64R OPTD													✔											
10	BUCHHOLZ RELAY ALARM														✔										
11	WDG TEMP IND. HIGH ALARM															✔									
12	AIR CELL LEAK DETECTOR																✔								
13	GRP-B TRIP RLY (86B) OPTD																		✔						
14	LBB OPTD FROM PU-B																			✔					
15	BB/LBB TRIP RLY (96B) OPTD																				✔				
16	REF PROTN OPTD																					✔			
17	BACKUP IMEPEDENCE OPTD																						✔		
18	OCEF OPTD																							✔	
19	86A SUPVN																								✔
20	SPARE		✔				✔	✔	✔									✔							

CUSTOMER : JALPURA KHURJA POWER TRANSMISSION LTD. (THE TATA POWER COMPANY LTD.) PROJECT : SUPPLY OF CRP & SAS AT 400/220kV METRO DEPOT GIS	CONTRACTOR : BAJEL PROJECTS LIMITED	Schneider Electric	TITLE : 400kV BUS REACTOR CONTROL & PROTN. PANEL (BAY-402) DIFF. PROTN.(87R) - I/O CONFIGURATION	PREPARED : BG REVIEWED : BG APPROVED : RKK	REVISION: Z DATE: 21-04-2025	SHT :024 CONT: 025
PO. No.& Date : 6100001138 DATED: 28.04.2024			PANEL TYPE : +402BRA,+402BRB	DRG. NO.: I1-226736082-S-02		

This document is the exclusive property of Schneider Electric and shall not be used, copied or communicated to third parties without prior authorization.

SL.NO	PROTECTION FUNCTIONS (P643 RELAY)	OUTPUT RELAYS																	
		RL1	RL2	RL3	RL4	RL5	RL6	RL7	RL8	RL9	RL10	RL11	RL12	RL13	RL14	RL15	RL16	WD1	WD2
		TO GROUP-A TRIP RELAY	TO GROUP-B TRIP RELAY	TO 64R	TO 21R	SPARE	SPARE	TO NIFPS	SPARE	SPARE	SPARE	SPARE	SPARE	SPARE	SPARE	SPARE	SPARE	TO 21R RLY CKT	SPARE
01	DIFF. PROTN OPTD	✔	✔	✔	✔			✔											
02	SEF PROTN OPTD	✔	✔																
03	RLY FAULTY																	✔	
04	SPARE			✔		✔	✔		✔	✔	✔	✔	✔	✔	✔	✔	✔		✔

This document is the exclusive property of Schneider Electric and shall not be used, copied or communicated to third parties without prior authorization.

CUSTOMER : JALPURA KHURJA POWER TRANSMISSION LTD. (THE TATA POWER COMPANY LTD.) PROJECT : SUPPLY OF CRP & SAS AT 400/220kV METRO DEPOT GIS	CONTRACTOR : BAJEL PROJECTS LIMITED	TITLE : 400kV BUS REACTOR CONTROL & PROTN. PANEL (BAY-402) DIFF. PROTN.(87R) - I/O CONFIGURATION	PREPARED : BG REVIEWED : BG APPROVED : RKK
PO. No.& Date : 6100001138 DATED: 28.04.2024		PANEL TYPE : +402BRA,+402BRB	DRG. NO.: I1-226736082-S-02

REVISION: Z
DATE: 21-04-2025
SHT : 025
CONT: 026

+402BRB

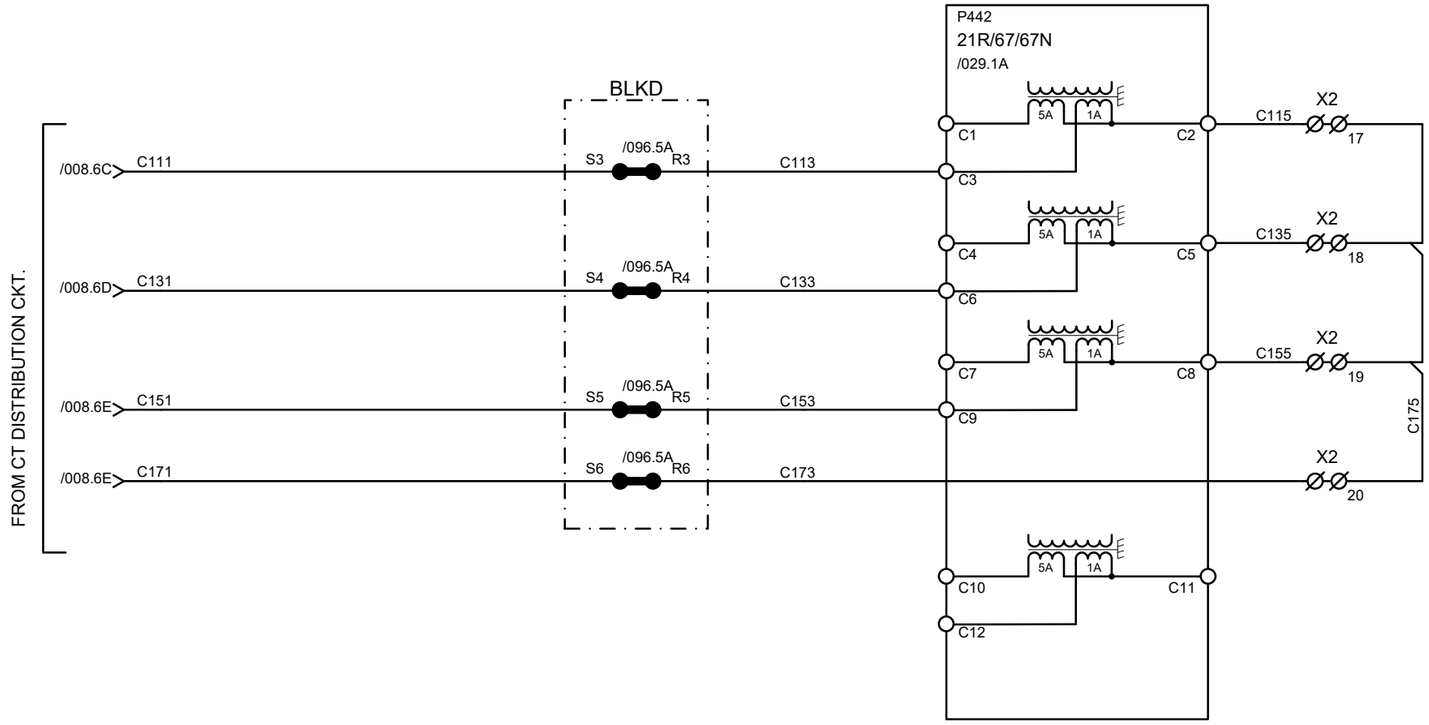

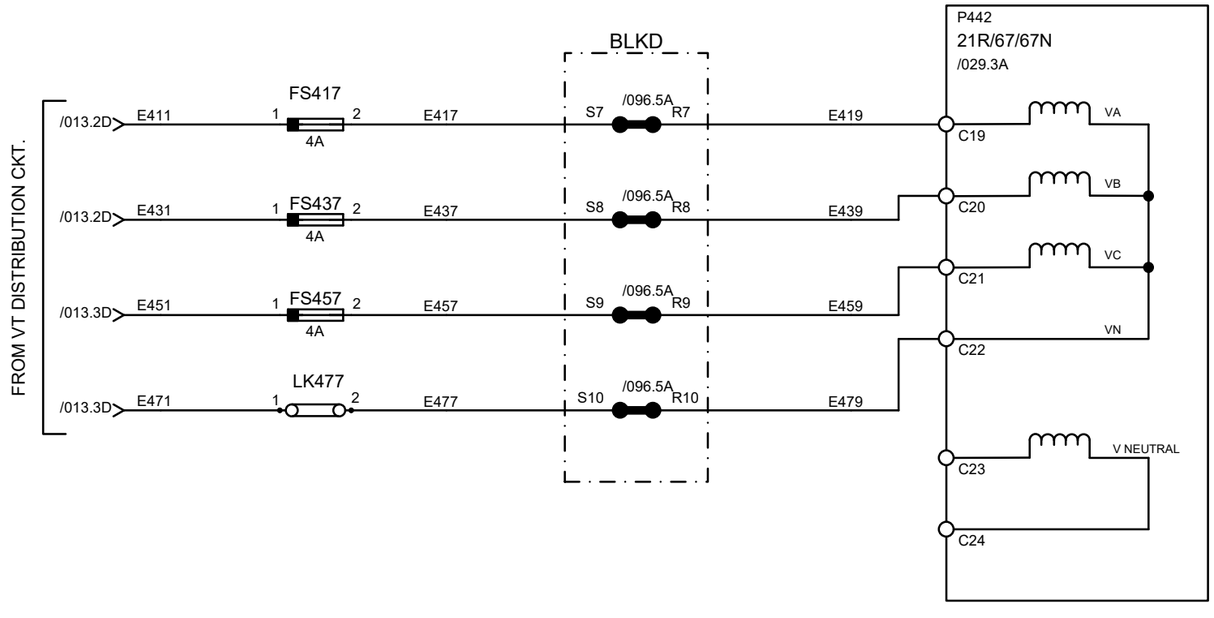

CUSTOMER : JALPURA KHURJA POWER TRANSMISSION LTD. (THE TATA POWER COMPANY LTD.) PROJECT : SUPPLY OF CRP & SAS AT 400/220kV METRO DEPOT GIS	CONTRACTOR : BAJEL PROJECTS LIMITED	Schneider Electric	TITLE : 400kV BUS REACTOR CONTROL & PROTN. PANEL (BAY-402) BACKUP IMPEDANCE CT & VT CKT.	PREPARED : BG REVIEWED : BG APPROVED : RKK	REVISION: Z DATE: 21-04-2025	SHT :026 CONT: 027
PO. No.& Date : 6100001138 DATED: 28.04.2024			PANEL TYPE : +402BRA,+402BRB	DRG. NO.: I1-226736082-S-02		

This document is the exclusive property of Schneider Electric and shall not be used, copied or communicated to third parties without prior authorization.

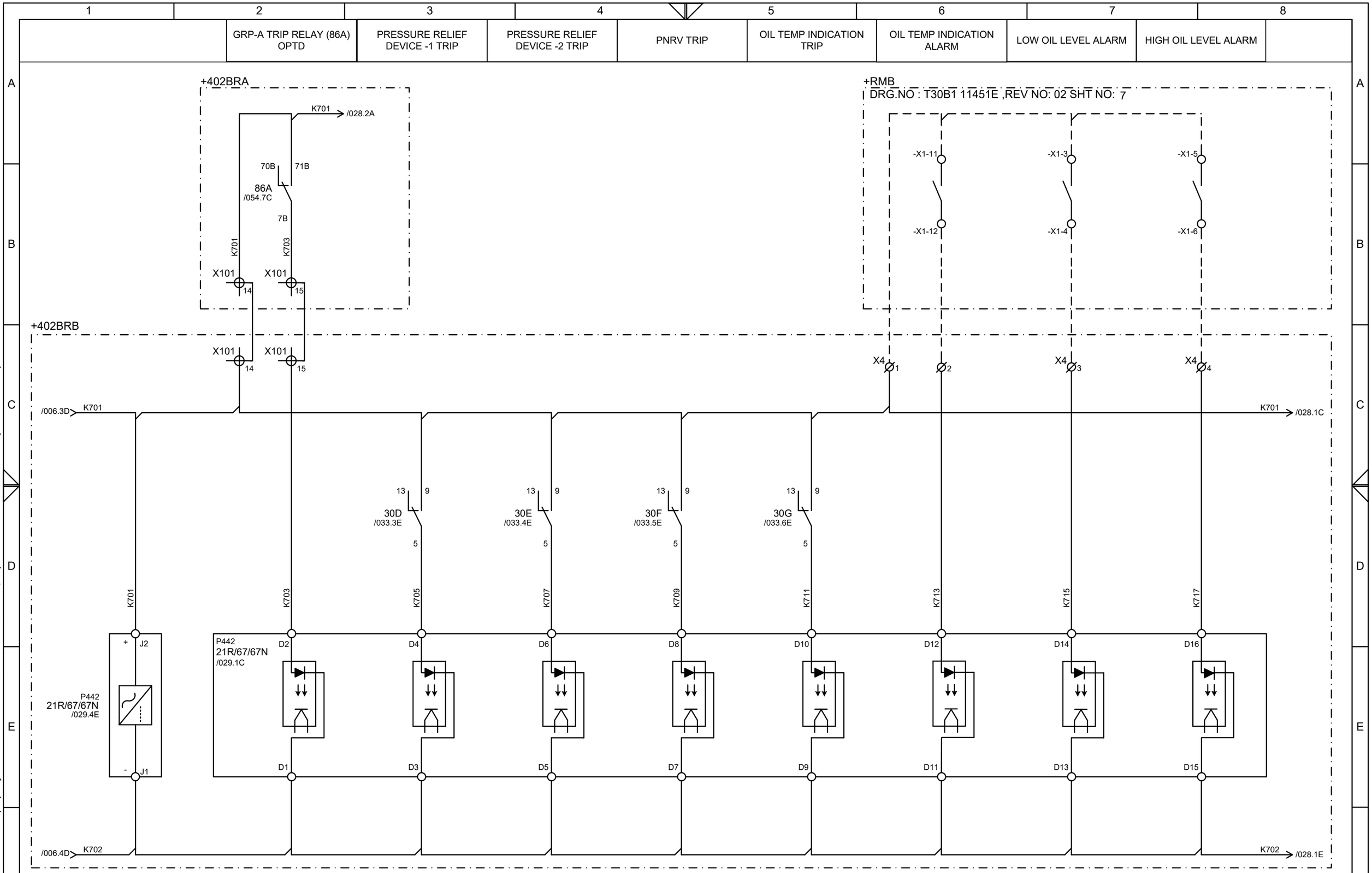

CUSTOMER : JALPURA KHURJA POWER TRANSMISSION LTD. (THE TATA POWER COMPANY LTD.) PROJECT : SUPPLY OF CRP & SAS AT 400/220kV METRO DEPOT GIS	CONTRACTOR : BAJEL PROJECTS LIMITED	Schneider Electric	TITLE : 400kV BUS REACTOR CONTROL & PROTN. PANEL (BAY-402) BACKUP IMPEDANCE OPTO CKT.
PO. No.& Date : 6100001138 DATED: 28.04.2024			PANEL TYPE : +402BRA,+402BRB

PREPARED : BG	REVISION: Z	SHT :027
REVIEWED : BG	DATE: 21-04-2025	CONT: 028
APPROVED : RKK		
DRG. NO.: I1-226736082-S-02		

This document is the exclusive property of Schneider Electric and shall not be used, copied or communicated to third parties without prior authorization.

This document is the exclusive property of Schneider Electric and shall not be used, copied or communicated to third parties without prior authorization.

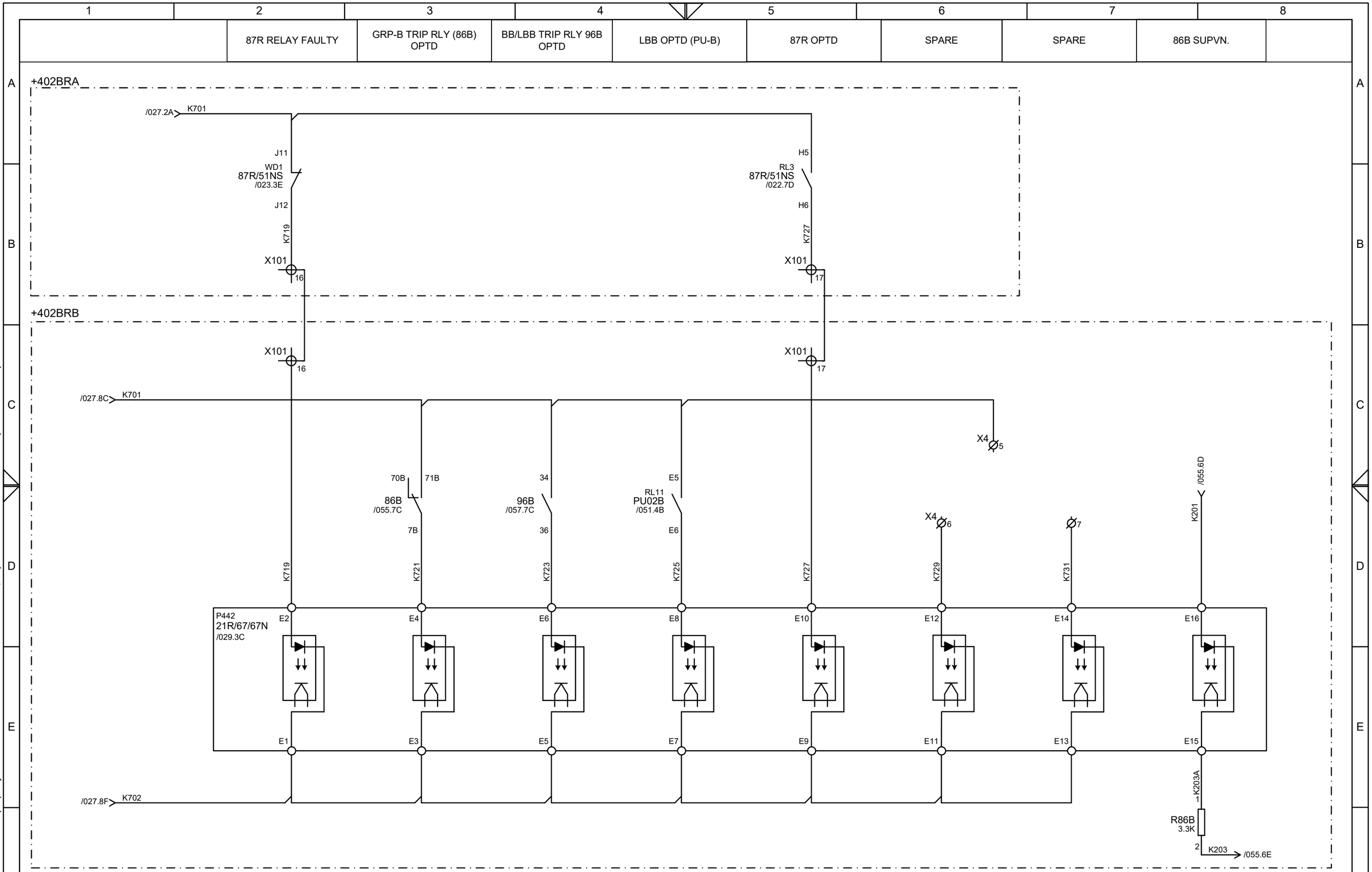

CUSTOMER : JALPURA KHURJA POWER TRANSMISSION LTD. (THE TATA POWER COMPANY LTD.) PROJECT : SUPPLY OF CRP & SAS AT 400/220kV METRO DEPOT GIS	CONTRACTOR : BAJEL PROJECTS LIMITED	TITLE : 400kV BUS REACTOR CONTROL & PROTN. PANEL (BAY-402) BACKUP IMPEDANCE OPTO CKT.	PREPARED : BG REVIEWED : BG APPROVED : RKK
PO. No.& Date : 6100001138 DATED: 28.04.2024		PANEL TYPE : +402BRA,+402BRB	DRG. NO.: I1-226736082-S-02

REVISION: Z
DATE: 21-04-2025
SHT :028
CONT:029

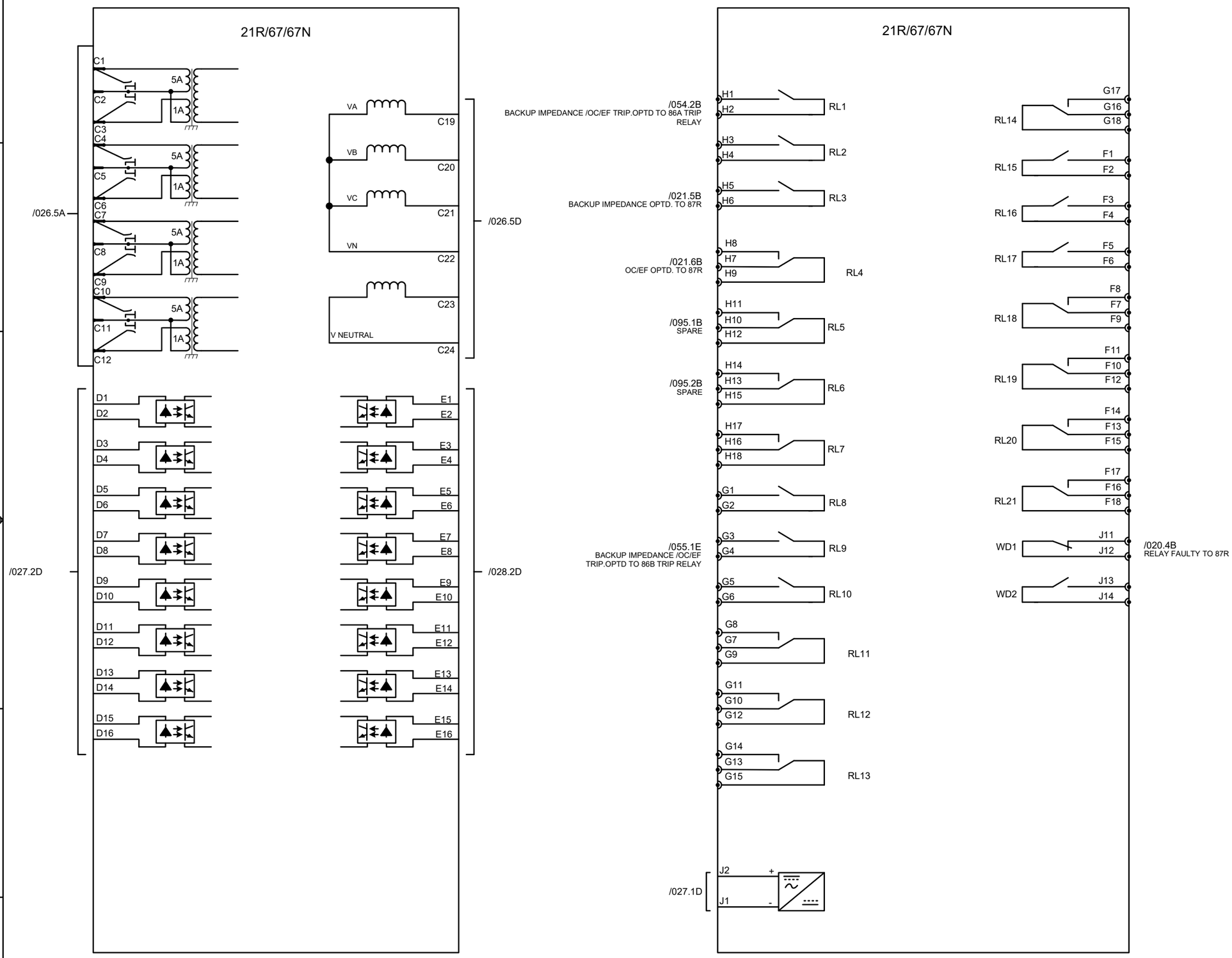

MiCOMP P442 LED CONFIGURATION (TRIP/ PROGRAMMABLE)

- BACKUP IMPEDANCE PROTN. OPTD.
- PRESSURE RELIEF DEVICE-1 TRIP
- PRESSURE RELIEF DEVICE-2 TRIP
- PNRV TRIP
- OIL TEMP. INDICATION TRIP
- OIL TEMP. INDICATION ALARM
- LOW OIL LEVEL ALARM
- HIGH OIL LEVEL ALARM
- OC TRIP
- EF TRIP
- R PH TRIP
- Y PH TRIP
- B PH TRIP
- SPARE
- SPARE

CUSTOMER : JALPURA KHURJA POWER TRANSMISSION LTD. (THE TATA POWER COMPANY LTD.) PROJECT : SUPPLY OF CRP & SAS AT 400/220kV METRO DEPOT GIS	CONTRACTOR : BAJEL PROJECTS LIMITED	Schneider Electric	TITLE : 400kV BUS REACTOR CONTROL & PROTN. PANEL (BAY-402) BACKUP IMPEDANCE RELAY CONTACT DISTRIBUTION
PO. No.& Date : 6100001138 DATED: 28.04.2024			PANEL TYPE : +402BRA,+402BRB

PREPARED : BG	REVISION: Z	SHT :029
REVIEWED : BG	DATE: 21-04-2025	CONT: 030
APPROVED : RKK		
DRG. NO.: I1-226736082-S-02		

This document is the exclusive property of Schneider Electric and shall not be used, copied or communicated to third parties without prior authorization.

SL.NO	STATUS (P442 RELAY)	OPTO INPUTS															
		I/P-1	I/P-2	I/P-3	I/P-4	I/P-5	I/P-6	I/P-7	I/P-8	I/P-9	I/P-10	I/P-11	I/P-12	I/P-13	I/P-14	I/P-15	I/P-16
	Schneider Electric	FOR DR	FOR STATUS	FOR STATUS	FOR STATUS	FOR STATUS	FOR STATUS	FOR STATUS	FOR STATUS	FOR STATUS	FOR STATUS	FOR STATUS	FOR DR	FOR STATUS	FOR STATUS	SPARE	FOR SUPERVISION
1	GRP-A TRIP RELAY (86A) OPERATED	✔															
2	PRESSURE RELIEF DEVICE-1 TRIP		✔														
3	PRESSURE RELIEF DEVICE-2 TRIP			✔													
4	PNRV TRIP				✔												
5	OIL TEMP. INDICATION TRIP					✔											
6	OIL TEMP. INDICATION ALARM						✔										
7	LOW OIL LEVEL ALARM							✔									
8	HIGH OIL LEVEL ALARM								✔								
9	87R RELAY FAULTY									✔							
10	GRP-B TRIP RLY (86B) OPTD										✔						
11	96B OPTD											✔					
12	LBB OPTD('PU-B)												✔				
13	87R OPTD													✔			
14	86B SUPVN.																✔
15	SPARE														✔	✔	

CUSTOMER : JALPURA KHURJA POWER TRANSMISSION LTD. (THE TATA POWER COMPANY LTD.) PROJECT : SUPPLY OF CRP & SAS AT 400/220kV METRO DEPOT GIS	CONTRACTOR : BAJEL PROJECTS LIMITED	Schneider Electric	TITLE : 400kV BUS REACTOR CONTROL & PROTN. PANEL (BAY-402) BACKUP IMPEDANCE PROTN. - INPUTS CONFIGURATION	PREPARED : BG REVIEWED : BG APPROVED : RKK	REVISION: Z DATE: 21-04-2025	SHT :030 CONT: 031
PO. No.& Date : 6100001138 DATED: 28.04.2024			PANEL TYPE : +402BRA,+402BRB	DRG. NO.: I1-226736082-S-02		

This document is the exclusive property of Schneider Electric and shall not be used, copied or communicated to third parties without prior authorization.

SL.NO	PROTECTION FUNCTIONS (P442 RELAY)	OUTPUT RELAYS																							
		RL1	RL2	RL3	RL4	RL5	RL6	RL7	RL8	RL9	RL10	RL11	RL12	RL13	RL14	RL15	RL16	RL17	RL18	RL19	RL20	RL21	WD1	WD2
		TO GROUP-A TRIP RELAY	SPARE	TO 87R	TO 87R	SPARE	SPARE	SPARE	SPARE	TO GROUP-B TRIP RELAY	SPARE	SPARE	SPARE	SPARE	SPARE	SPARE	SPARE	SPARE	SPARE	SPARE	SPARE	SPARE	TO 87R	SPARE
01	BACK-UP IMPEDENCE PROTN. OPTD.	✔		✔						✔														
02	OC OPTD	✔			✔																			
03	OC OPTD	✔																						
04	RELAY FAULTY																						✔	
05	SPARES			✔	✔	✔	✔	✔	✔	✔	✔	✔	✔	✔	✔	✔	✔	✔	✔	✔	✔	✔		✔

CUSTOMER : JALPURA KHURJA POWER TRANSMISSION LTD. (THE TATA POWER COMPANY LTD.) PROJECT : SUPPLY OF CRP & SAS AT 400/220kV METRO DEPOT GIS	CONTRACTOR : BAJEL PROJECTS LIMITED	TITLE : 400kV BUS REACTOR CONTROL & PROTN. PANEL (BAY-402) BACKUP IMPEDANCE PROTN. - INPUTS CONFIGURATION	PREPARED : BG REVIEWED : BG APPROVED : RKK	REVISION: Z DATE: 21-04-2025	SHT :031 CONT: 032
PO. No.& Date : 6100001138 DATED: 28.04.2024		PANEL TYPE : +402BRA,+402BRB	DRG. NO.: I1-226736082-S-02		

This document is the exclusive property of Schneider Electric and shall not be used, copied or communicated to third parties without prior authorization.

This document is the exclusive property of Schneider Electric and shall not be used, copied or communicated to third parties without prior authorization.

BUCHHOLZ RELAY TRIP	WINDING TEMP VERY HIGH TRIP	SPR TRIP

+RMB

DRG.NO : T30B1 11451E ,REV NO: 02 SHT NO: 7

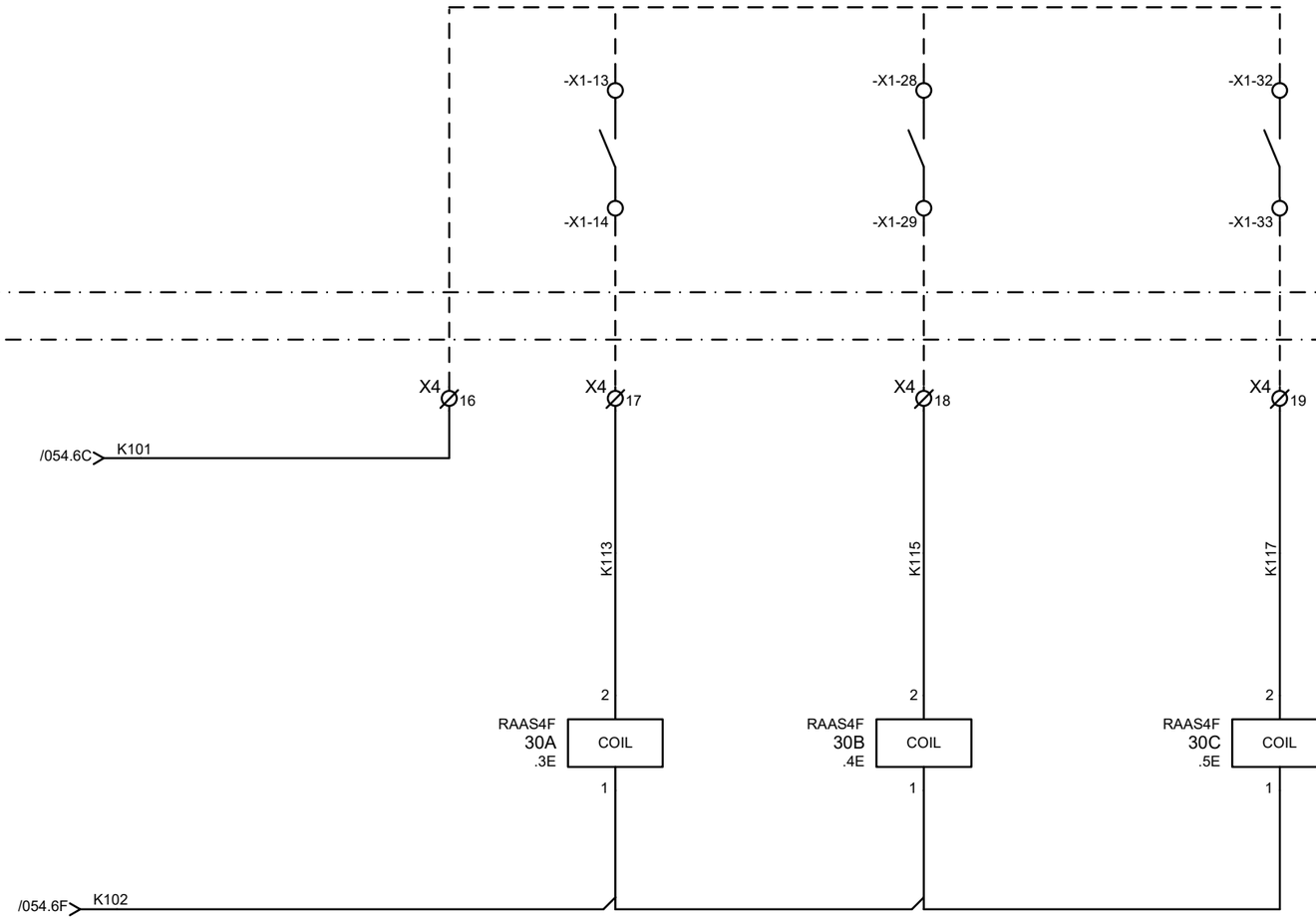

30A

	2	COIL	1	
				.3D
TO 86A TRIP RLY CKT.	11 7		3	/034.3B
TO 86B TRIP RLY CKT.	12 8		4	/034.3D
TO 87R TRIP RLY CKT.	13 9		5	/020.2D
TO NIFPS	14 10		6	/093.5D

30B

	2	COIL	1	
				.4D
TO 86A TRIP RLY CKT.	11 7		3	/034.3B
TO 86B TRIP RLY CKT.	12 8		4	/034.3D
TO 87T TRIP RLY CKT.	13 9		5	/020.2D
SPARE	14 10		6	/094.2C

30C

	2	COIL	1	
				.5D
TO 86A TRIP RLY CKT.	11 7		3	/034.4B
TO 86B TRIP RLY CKT.	12 8		4	/034.4D
TO 87R TRIP RLY CKT.	13 9		5	/020.3D
SPARE	14 10		6	/094.2C

CUSTOMER : JALPURA KHURJA POWER TRANSMISSION LTD. (THE TATA POWER COMPANY LTD.) **PROJECT :** SUPPLY OF CRP & SAS AT 400/220kV METRO DEPOT GIS	**CONTRACTOR :** BAJEL PROJECTS LIMITED	Schneider Electric	**TITLE :** 400kV BUS REACTOR CONTROL & PROTN. PANEL (BAY-402) REACTOR TROUBLES CIRCUIT	PREPARED : BG REVIEWED : BG APPROVED : RKK REVISION: Z DATE: 21-04-2025 SHT :032 CONT:033
PO. No.& Date : 6100001138 DATED: 28.04.2024			**PANEL TYPE :** +402BRA,+402BRB	**DRG. NO.:** I1-226736082-S-02

PRD-1 TRIP	PRD-2 TRIP	PNRV TRIP	OIL TEMP. VERY HIGH TRIP

+RMB

DRG.NO : T30B1 11451E ,REV NO: 02 SHT NO: 40

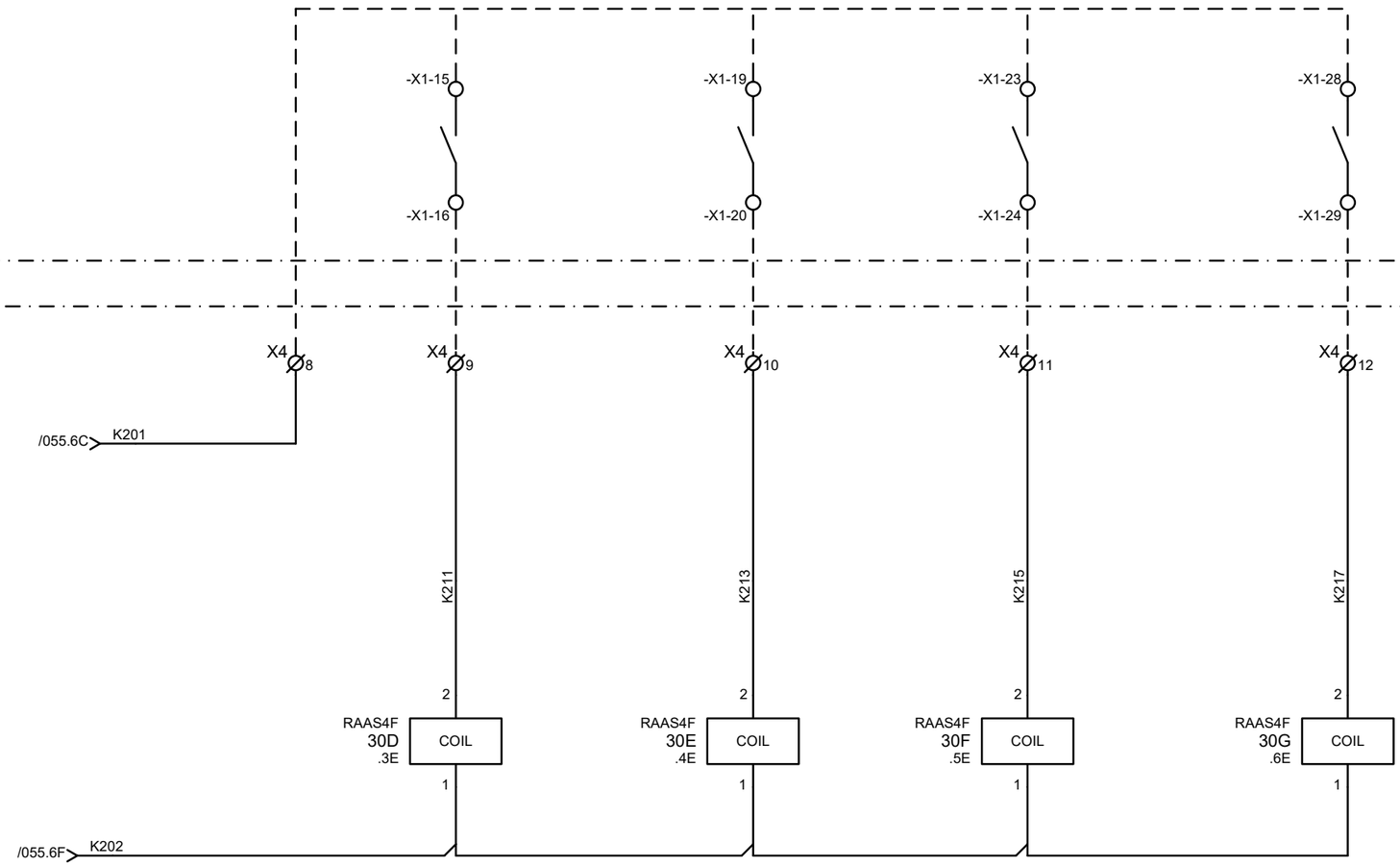

30D

	2	COIL	1	.3D
TO 86A TRIP RLY.	11 7		3	/035.4B
TO 86B TRIP RLY.	12 8		4	/035.4D
TO 21R	13 9		5	/027.3D
SPARE	14 10		6	/095.4D

30F

	2	COIL	1	.5D
TO 86A TRIP RLY.	11 7		3	/035.5B
TO 86B TRIP RLY.	12 8		4	/035.5D
TO 21R	13 9		5	/027.4D
SPARE	14 10		6	/095.6D

30E

	2	COIL	1	.4D
TO 86A TRIP RLY.	11 7		3	/035.4B
TO 86B TRIP RLY.	12 8		4	/035.4D
TO 21R	13 9		5	/027.4D
SPARE	14 10		6	/095.5D

30G

	2	COIL	1	.6D
TO 86A TRIP RLY.	11 7		3	/035.6B
TO 86B TRIP RLY.	12 8		4	/035.6D
TO 21R	13 9		5	/027.5D
SPARE	14 10		6	/095.6D

CUSTOMER : JALPURA KHURJA POWER TRANSMISSION LTD. (THE TATA POWER COMPANY LTD.) **PROJECT : SUPPLY OF CRP & SAS AT 400/220kV METRO DEPOT GIS** **PO. No.& Date : 6100001138 DATED: 28.04.2024**	**CONTRACTOR : BAJEL PROJECTS LIMITED**	Schneider Electric	**TITLE : 400kV BUS REACTOR CONTROL & PROTN. PANEL (BAY-402) REACTOR TROUBLES CIRCUIT** **PANEL TYPE : +402BRA,+402BRB**

PREPARED : BG	REVISION: Z	SHT :033
REVIEWED : BG	DATE: 21-04-2025	CONT: 034
APPROVED : RKK		
DRG. NO.: I1-226736082-S-02		

This document is the exclusive property of Schneider Electric and shall not be used, copied or communicated to third parties without prior authorization.

BUCHHOLZ RELAY-1 TRIP	WINDING TEMP VERY HIGH TRIP	SPR TRIP

+402BRA

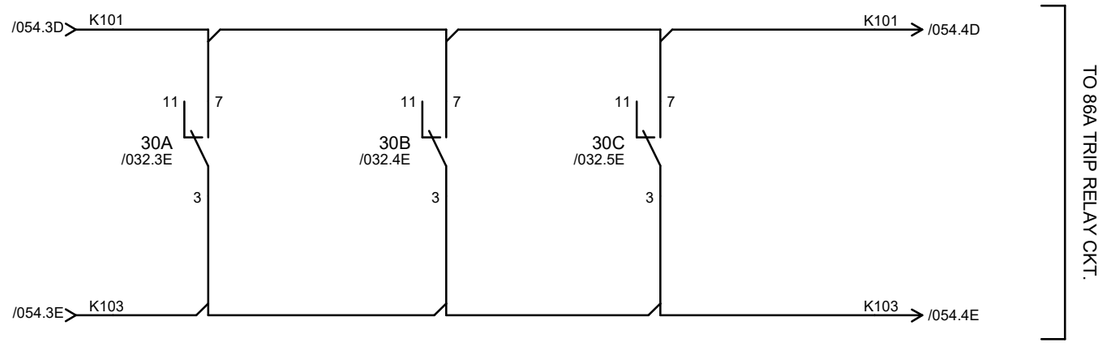

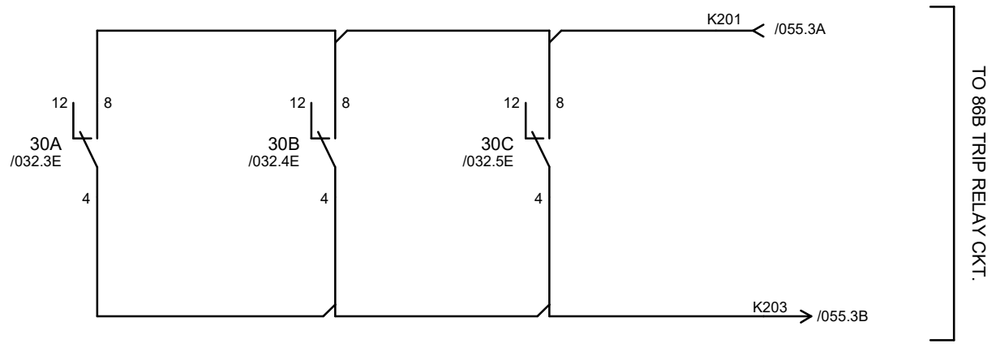

This document is the exclusive property of Schneider Electric and shall not be used, copied or communicated to third parties without prior authorization.

CUSTOMER : JALPURA KHURJA POWER TRANSMISSION LTD. (THE TATA POWER COMPANY LTD.) PROJECT : SUPPLY OF CRP & SAS AT 400/220kV METRO DEPOT GIS	CONTRACTOR : BAJEL PROJECTS LIMITED	Schneider Electric	TITLE : 400kV BUS REACTOR CONTROL & PROTN. PANEL (BAY-402) REACTOR TROUBLES CONTACT DISTRIBUTION	PREPARED : BG REVIEWED : BG APPROVED : RKK	REVISION: Z DATE: 21-04-2025	SHT :034 CONT: 035
PO. No.& Date : 6100001138 DATED: 28.04.2024			PANEL TYPE : +402BRA,+402BRB	DRG. NO.: I1-226736082-S-02		

PRD-1 TRIP	PRD-2 TRIP	PNRV TRIP	OIL TEMP. VERY HIGH TRIP

+402BRB

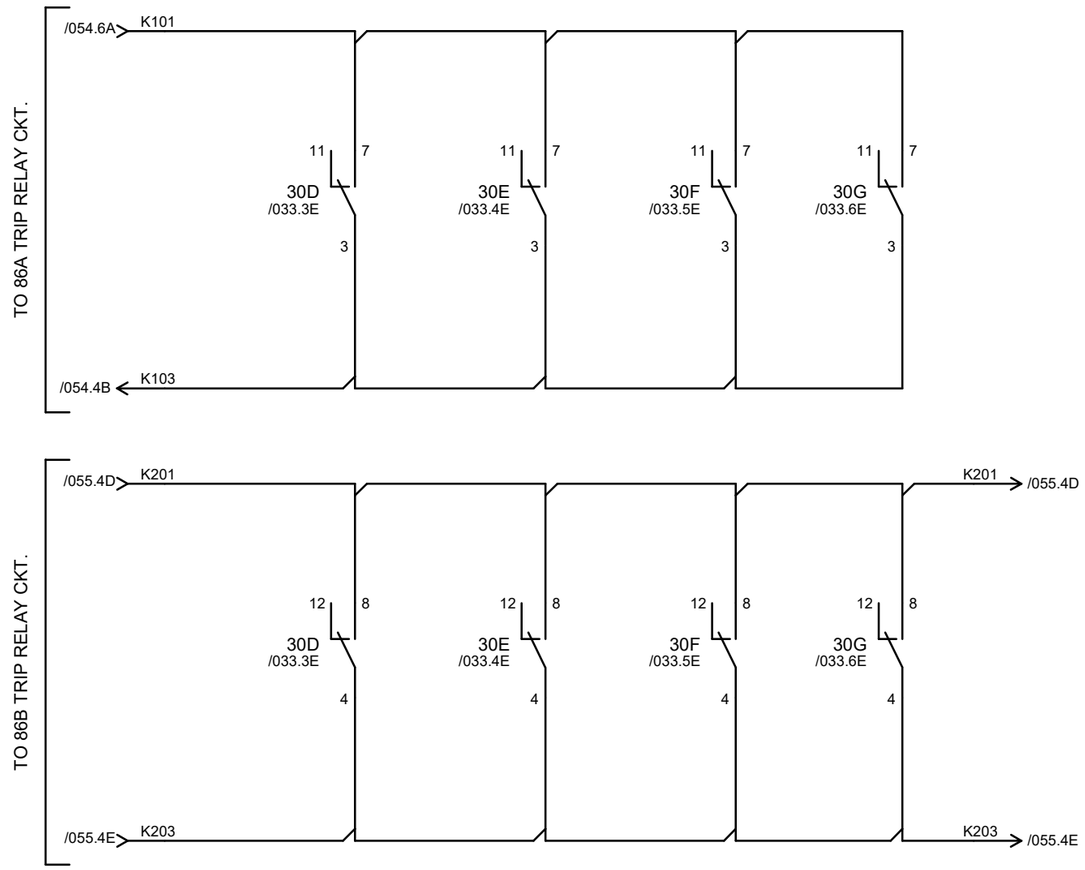

CUSTOMER : JALPURA KHURJA POWER TRANSMISSION LTD. (THE TATA POWER COMPANY LTD.) PROJECT : SUPPLY OF CRP & SAS AT 400/220kV METRO DEPOT GIS	CONTRACTOR : BAJEL PROJECTS LIMITED	Schneider Electric	TITLE : 400kV BUS REACTOR CONTROL & PROTN. PANEL (BAY-402) REACTOR TROUBLES CONTACT DISTRIBUTION	PREPARED : BG REVIEWED : BG APPROVED : RKK	REVISION: Z DATE: 21-04-2025	SHT :035 CONT: 036
PO. No.& Date : 6100001138 DATED: 28.04.2024			PANEL TYPE : +402BRA,+402BRB	DRG. NO.: I1-226736082-S-02		

This document is the exclusive property of Schneider Electric and shall not be used, copied or communicated to third parties without prior authorization.

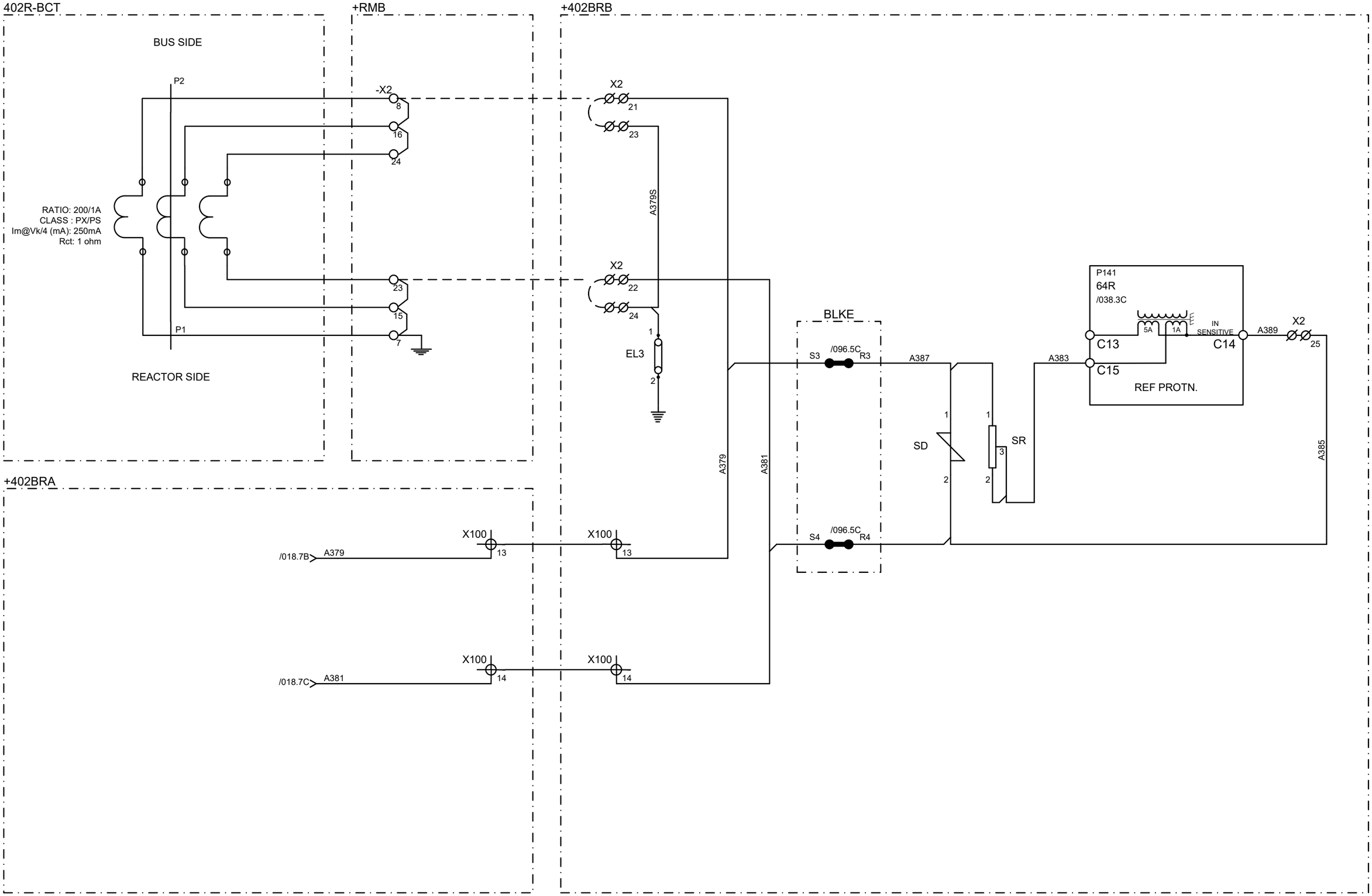

CUSTOMER : JALPURA KHURJA POWER TRANSMISSION LTD. (THE TATA POWER COMPANY LTD.) PROJECT : SUPPLY OF CRP & SAS AT 400/220kV METRO DEPOT GIS	CONTRACTOR : BAJEL PROJECTS LIMITED	Schneider Electric	TITLE : 400kV BUS REACTOR CONTROL & PROTN. PANEL (BAY-402) REF PROTN. CKT.	PREPARED : BG REVIEWED : BG APPROVED : RKK	REVISION: Z DATE: 21-04-2025	SHT :036 CONT:037
PO. No.& Date : 6100001138 DATED: 28.04.2024			PANEL TYPE : +402BRA,+402BRB	DRG. NO.: I1-226736082-S-02		

This document is the exclusive property of Schneider Electric and shall not be used, copied or communicated to third parties without prior authorization.

87R OPTD.	LBB OPTD (PU-A)	BB/LBB TRIP RELAY 96A OPTD	SPARE	SPARE	SPARE	SPARE	SPARE

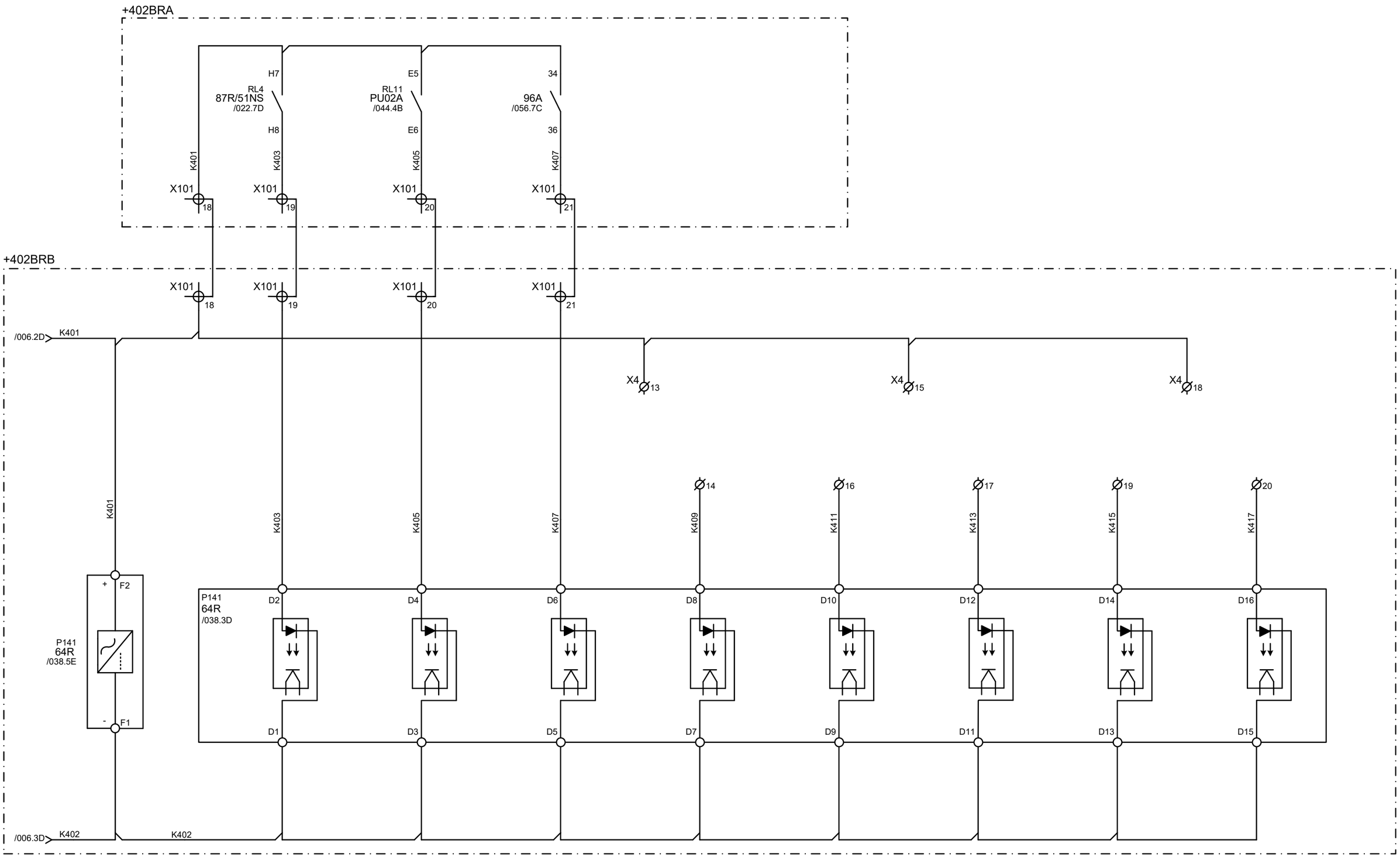

CUSTOMER : JALPURA KHURJA POWER TRANSMISSION LTD. (THE TATA POWER COMPANY LTD.) PROJECT : SUPPLY OF CRP & SAS AT 400/220kV METRO DEPOT GIS	CONTRACTOR : BAJEL PROJECTS LIMITED	Schneider Electric	TITLE : 400kV BUS REACTOR CONTROL & PROTN. PANEL (BAY-402) REF PROTN.-OPTO CKT.	PREPARED : BG REVIEWED : BG APPROVED : RKK REVISION: Z DATE: 21-04-2025 SHT :037 CONT:038
PO. No.& Date : 6100001138 DATED: 28.04.2024			PANEL TYPE : +402BRA,+402BRB	DRG. NO.: I1-226736082-S-02

This document is the exclusive property of Schneider Electric and shall not be used, copied or communicated to third parties without prior authorization.

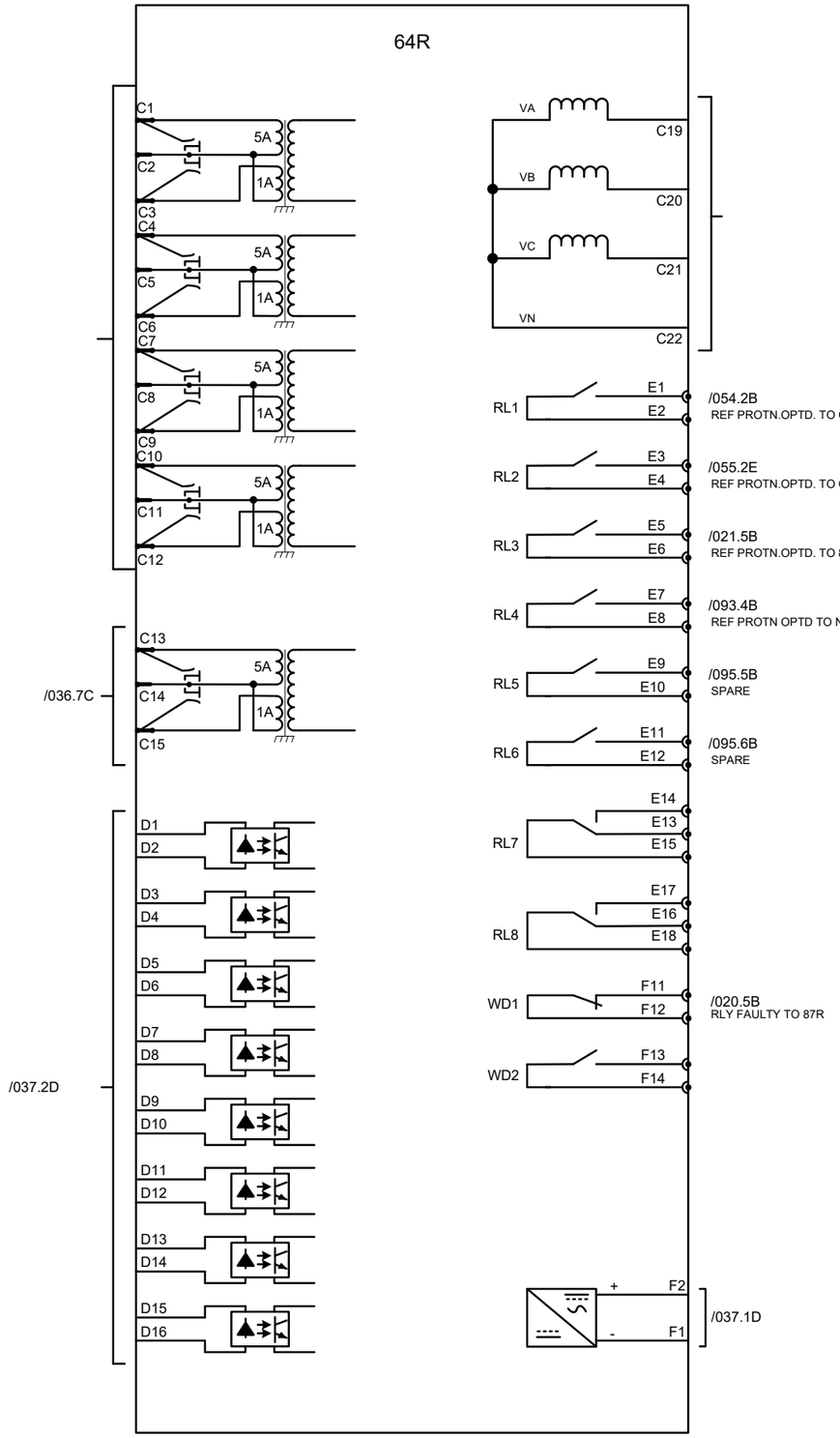

MiCOMP P141 LED CONFIGURATION (TRIP/ PROGRAMMABLE)

- REF PROTN. OPTD.
- SPARE
- SPARE
- SPARE
- SPARE
- SPARE
- SPARE
- SPARE

CUSTOMER : JALPURA KHURJA POWER TRANSMISSION LTD. (THE TATA POWER COMPANY LTD.) PROJECT : SUPPLY OF CRP & SAS AT 400/220kV METRO DEPOT GIS	CONTRACTOR : BAJEL PROJECTS LIMITED	TITLE : 400kV BUS REACTOR CONTROL & PROTN. PANEL (BAY-402) REF RELAY CONTACT DISTRIBUTION	PREPARED : BG REVIEWED : BG APPROVED : RKK
PO. No.& Date : 6100001138 DATED: 28.04.2024		PANEL TYPE : +402BRA,+402BRB	DRG. NO.: I1-226736082-S-02

REVISION: Z
DATE: 21-04-2025
SHT : 038
CONT: 039

This document is the exclusive property of Schneider Electric and shall not be used, copied or communicated to third parties without prior authorization.

SL.NO	STATUS (P141 RELAY)	OPTO INPUTS							
		I/P-1	I/P-2	I/P-3	I/P-4	I/P-5	I/P-6	I/P-7	I/P-8
		FOR D/R	FOR D/R	SPARE	SPARE	SPARE	SPARE	SPARE	SPARE
01	87R OPTD	✔							
02	LBB OPTD (PU-A)		✔						
03	BB/LBB OPTD			✔					
04	SPARE				✔	✔	✔	✔	✔

SL.NO	PROTECTION FUNCTIONS (P141 RELAY)	OUTPUT RELAYS									
		RL1	RL2	RL3	RL4	RL5	RL6	RL7	RL8	WD1	WD2
		TO GROUP-A TRIP RELAY	TO GROUP-B TRIP RELAY	TO 87R	TO NIFPS	SPARE	SPARE	SPARE	SPARE	TO 87R	SPARE
01	REF PROTN. OPTD.	✔	✔		✔						
02	RELAY FAULTY									✔	
02	SPARE			✔		✔	✔	✔	✔		✔

CUSTOMER : JALPURA KHURJA POWER TRANSMISSION LTD. (THE TATA POWER COMPANY LTD.) PROJECT : SUPPLY OF CRP & SAS AT 400/220kV METRO DEPOT GIS	CONTRACTOR : BAJEL PROJECTS LIMITED		TITLE : 400kV BUS REACTOR CONTROL & PROTN. PANEL (BAY-402) REF PROTN. - INPUTS & OUTPUT CONFIGURATION	PREPARED : BG REVIEWED : BG APPROVED : RKK	REVISION: Z DATE: 21-04-2025	SHT : 039 CONT: 040
PO. No.& Date : 6100001138 DATED: 28.04.2024			PANEL TYPE : +402BRA,+402BRB	DRG. NO.: I1-226736082-S-02		

This document is the exclusive property of Schneider Electric and shall not be used, copied or communicated to third parties without prior authorization.

This document is the exclusive property of Schneider Electric and shall not be used, copied or communicated to third parties without prior authorization.

+402BRA

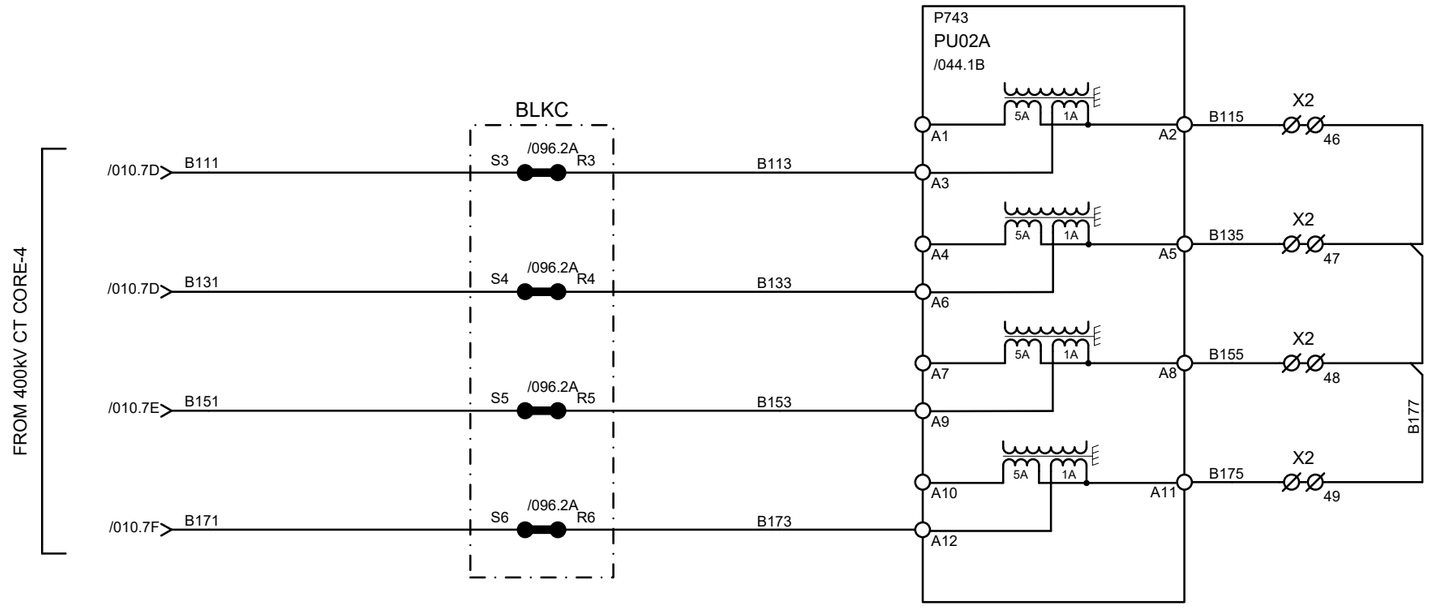

PU02A

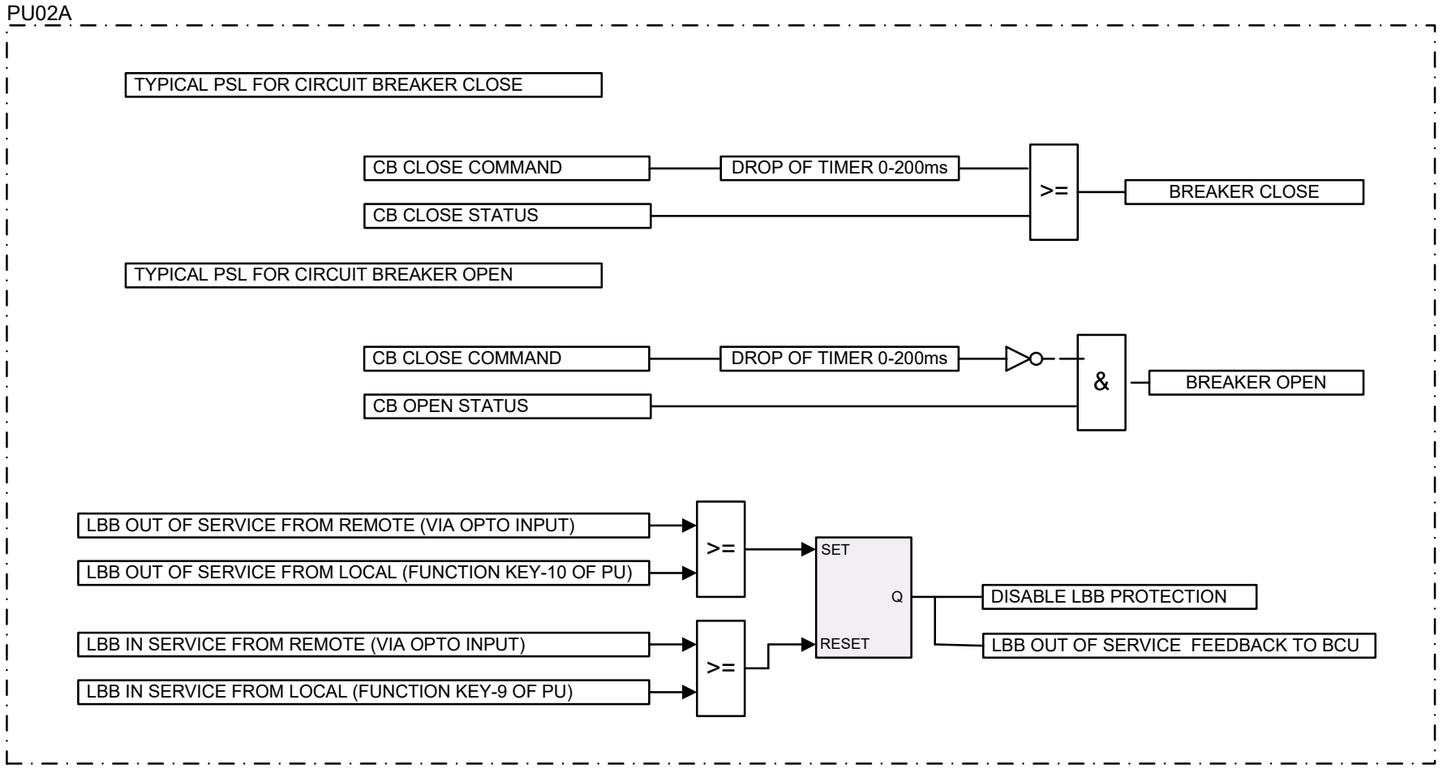

CUSTOMER : JALPURA KHURJA POWER TRANSMISSION LTD. (THE TATA POWER COMPANY LTD.) PROJECT : SUPPLY OF CRP & SAS AT 400/220kV METRO DEPOT GIS	CONTRACTOR : BAJEL PROJECTS LIMITED	Schneider Electric	TITLE : 400kV BUS REACTOR CONTROL & PROTN. PANEL (BAY-402) PU02A-CT CKT.	PREPARED : BG REVIEWED : BG APPROVED : RKK	REVISION: Z DATE: 21-04-2025	SHT :040 CONT: 041
PO. No.& Date : 6100001138 DATED: 28.04.2024			PANEL TYPE : +402BRA,+402BRB	DRG. NO.: I1-226736082-S-02		

This document is the exclusive property of Schneider Electric and shall not be used, copied or communicated to third parties without prior authorization.

DC SUPPLY FROM BUSBAR PANEL	MAIN CB R-PH CLOSED	MAIN CB Y-PH CLOSED	MAIN CB B-PH CLOSED	MAIN CB R-PH OPEN	MAIN CB Y-PH OPEN	MAIN CB B-PH OPEN	SPARE	SPARE

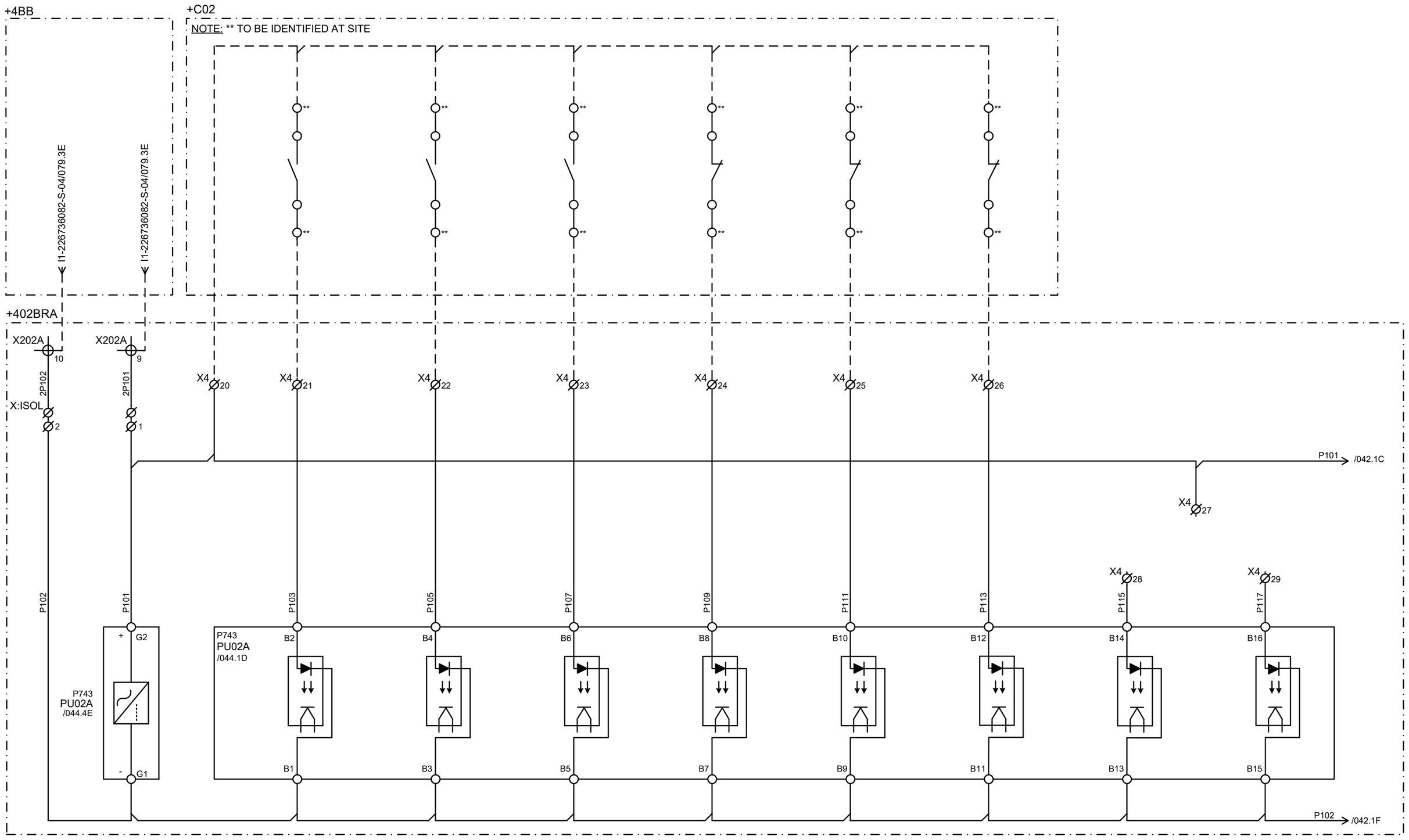

CUSTOMER : JALPURA KHURJA POWER TRANSMISSION LTD. (THE TATA POWER COMPANY LTD.) PROJECT : SUPPLY OF CRP & SAS AT 400/220kV METRO DEPOT GIS	CONTRACTOR : BAJEL PROJECTS LIMITED	Schneider Electric	TITLE : 400kV BUS REACTOR CONTROL & PROTN. PANEL (BAY-402) PU02A-OPTO CKT.	PREPARED : BG REVIEWED : BG APPROVED : RKK REVISION: Z DATE: 21-04-2025 SHT : 041 CONT: 042
PO. No.& Date : 6100001138 DATED: 28.04.2024			PANEL TYPE : +402BRA,+402BRB	DRG. NO.: I1-226736082-S-02

1	2	3	4	5	6	7	8
	BB DISCONNECTOR Q1(QL1) OPEN	BB DISCONNECTOR Q1(QL1) CLOSE	BB DISCONNECTOR Q2(QL2) OPEN	BB DISCONNECTOR Q2(QL2) CLOSE	BB/LBB TRIP RELAY (96A) OPTD	BB/LBB TRIP RELAY (96B) OPTD	SPARE	SPARE

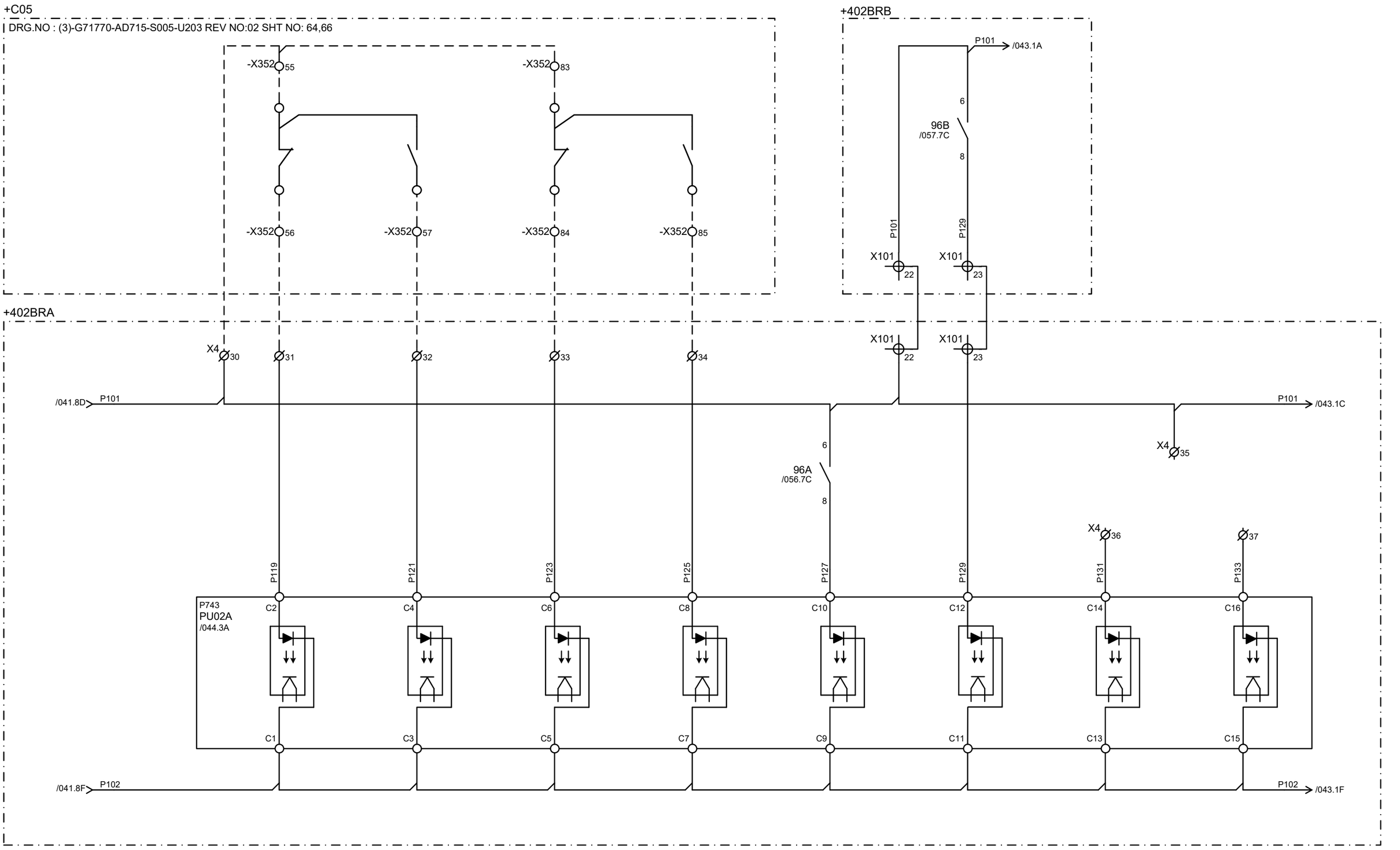

CUSTOMER : JALPURA KHURJA POWER TRANSMISSION LTD. (THE TATA POWER COMPANY LTD.) PROJECT : SUPPLY OF CRP & SAS AT 400/220kV METRO DEPOT GIS	CONTRACTOR : BAJEL PROJECTS LIMITED	Schneider Electric	TITLE : 400kV BUS REACTOR CONTROL & PROTN. PANEL (BAY-402) PU02A-OPTO CKT.	PREPARED : BG REVIEWED : BG APPROVED : RKK REVISION: Z DATE: 21-04-2025 SHT : 042 CONT: 043
PO. No.& Date : 6100001138 DATED: 28.04.2024			PANEL TYPE : +402BRA,+402BRB	DRG. NO.: I1-226736082-S-02

This document is the exclusive property of Schneider Electric and shall not be used, copied or communicated to third parties without prior authorization.

	CB CLOSE COMMAND FEEDBACK	3-PH LBB INITIATION	LBB IN SERVICE	LBB OUT OF SERVICE	SPARE	SPARE	SPARE	BB/LBB TRIP RELAY (96A) SUPVN

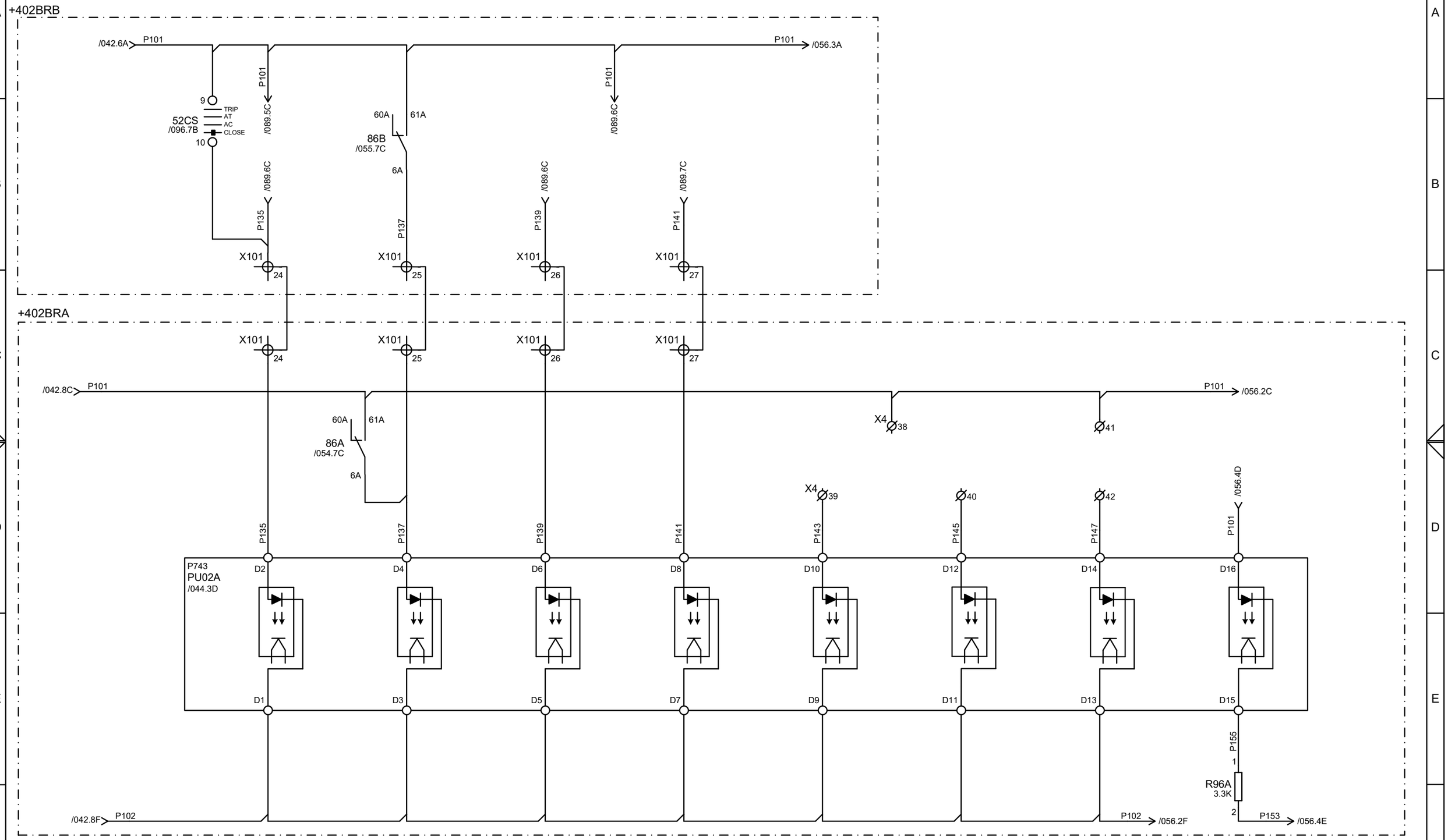

CUSTOMER : JALPURA KHURJA POWER TRANSMISSION LTD. (THE TATA POWER COMPANY LTD.) PROJECT : SUPPLY OF CRP & SAS AT 400/220kV METRO DEPOT GIS	CONTRACTOR : BAJEL PROJECTS LIMITED	Schneider Electric	TITLE : 400kV BUS REACTOR CONTROL & PROTN. PANEL (BAY-402) PU02A-OPTO CKT.	PREPARED : BG REVIEWED : BG APPROVED : RKK REVISION: Z DATE: 21-04-2025 SHT : 043 CONT: 044
PO. No.& Date : 6100001138 DATED: 28.04.2024			PANEL TYPE : +402BRA,+402BRB	DRG. NO.: I1-226736082-S-02

This document is the exclusive property of Schneider Electric and shall not be used, copied or communicated to third parties without prior authorization.

This document is the exclusive property of Schneider Electric and shall not be used, copied or communicated to third parties without prior authorization.

+402BRA

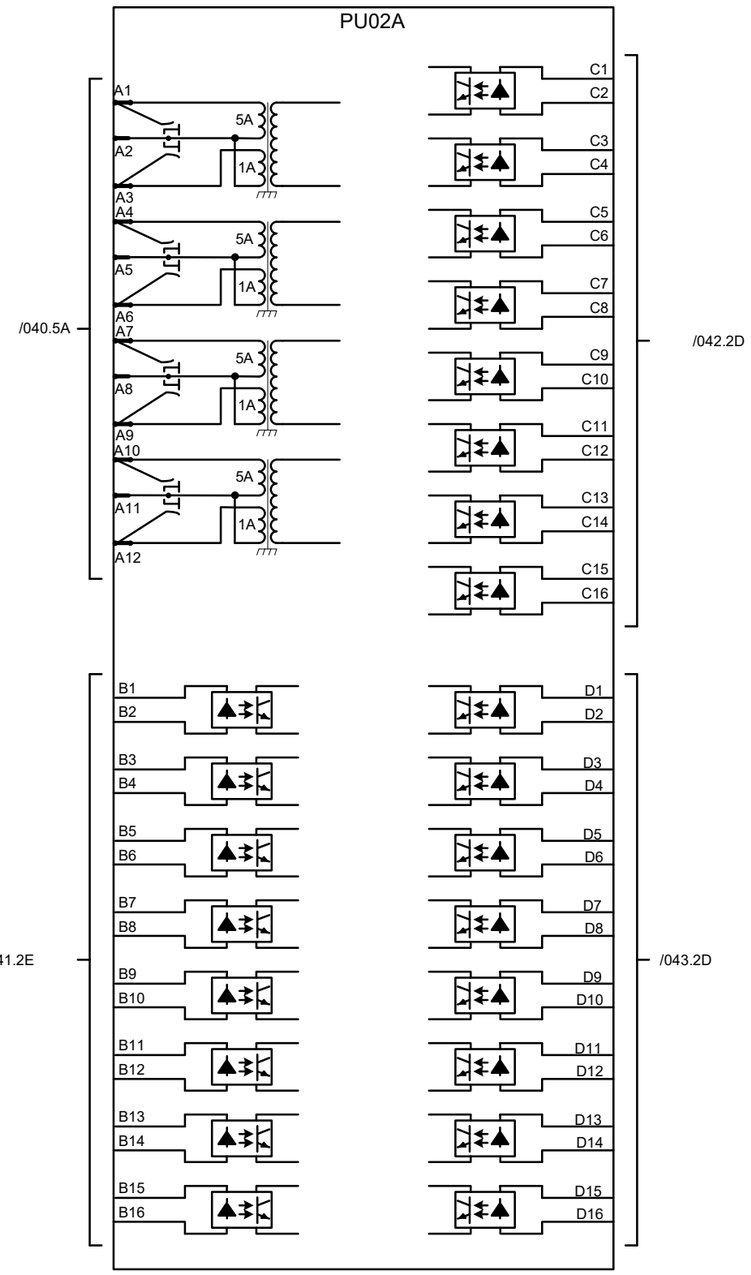

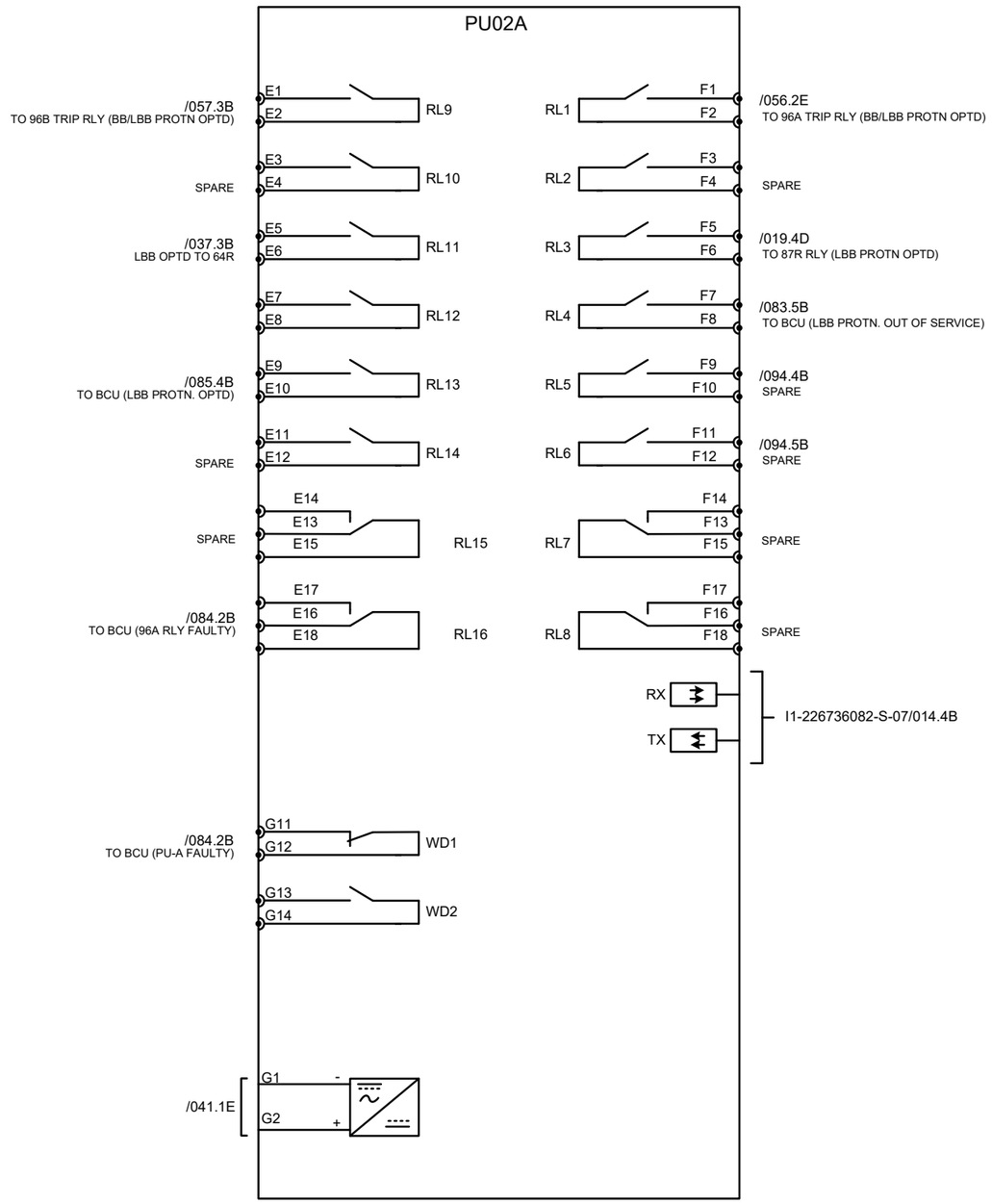

MiCOM P743 LED CONFIGARATION (DEDICATED LED's)

- TRIP
- ALARM
- OUT OF SERVICE
- HEALTHY

MiCOM 743 LED CONFIGARATION (LEFT SIDE LED)

- BB PROTN OPTD.
- LBB RE-TRIP OPERATED
- LBB OPERATED
- BUSBAR R-PH OPTD.
- BUSBAR Y-PH OPTD.
- BUSBAR B-PH OPTD.
- SPARE
- SPARE

MiCOM P743 LED CONFIGARATION (RIGHT SIDE LED)

- LBB IN SERVICE
- LBB OUT OF SERVICE
- SPARE
- SPARE
- SPARE
- SPARE
- SPARE
- SPARE
- LBB IN SERV CMD.
- LBB OUT OF SERV CMD.

CUSTOMER : JALPURA KHURJA POWER TRANSMISSION LTD. (THE TATA POWER COMPANY LTD.) PROJECT : SUPPLY OF CRP & SAS AT 400/220kV METRO DEPOT GIS	CONTRACTOR : BAJEL PROJECTS LIMITED	Schneider Electric	TITLE : 400kV BUS REACTOR CONTROL & PROTN. PANEL (BAY-402) PU02A CONTACT DISTRIBUTION
PO. No.& Date : 6100001138 DATED: 28.04.2024			PANEL TYPE : +402BRA,+402BRB

PREPARED : BG	REVISION: Z	SHT : 044
REVIEWED : BG	DATE: 21-04-2025	CONT: 045
APPROVED : RKK		
DRG. NO.: I1-226736082-S-02		

SL.NO	STATUS (P743 RELAY)	OPTO INPUTS															
		I/P-1	I/P-2	I/P-3	I/P-4	I/P-5	I/P-6	I/P-7	I/P-8	I/P-9	I/P-10	I/P-11	I/P-12	I/P-13	I/P-14	I/P-15	I/P-16
	Schneider Electric	FOR DR	FOR DR	FOR DR	FOR DR	FOR DR	FOR DR	SPARE	SPARE	FOR DR	FOR DR	FOR DR	FOR DR	FOR DR	FOR DR	SPARE	SPARE
01	MAIN CB R-PH CLOSED	✔															
02	MAIN CB Y-PH CLOSED		✔														
03	MAIN CB B-PH CLOSED			✔													
04	MAIN CB R-PH OPEN				✔												
05	MAIN CB Y-PH OPEN					✔											
06	MAIN CB B-PH OPEN						✔										
07	BB DISCONNECTOR Q1(QL1) OPEN									✔							
08	BB DISCONNECTOR Q1(QL1) CLOSE										✔						
09	BB DISCONNECTOR Q2(QL2) OPEN											✔					
10	BB DISCONNECTOR Q2(QL2) CLOSE												✔				
11	BB/LBB TRIP RLY(96A) OPTD FOR 3PH LBB INITIATION													✔			
12	BB/LBB TRIP RLY(96B) OPTD FOR 3PH LBB INITIATION														✔		
13	SPARE							✔	✔							✔	✔

SL.NO	STATUS (P743 RELAY)	OPTO INPUTS							
		I/P-17	I/P-18	I/P-19	I/P-20	I/P-21	I/P-22	I/P-23	I/P-24
	Schneider Electric	FOR DR	FOR DR	FOR DR	FOR DR	SPARE	SPARE	SPARE	FOR SUPERVISION
14	CB CLOSE COMMAND FEEDBACK	✔							
15	3-PH LBB INITIATION		✔						
16	LBB IN SERVICE			✔					
17	LBB OUT OF SERVICE				✔				
18	BB/LBB TRIP RLY(96A) SUPVN.								✔
19	SPARE					✔	✔	✔	

CUSTOMER : JALPURA KHURJA POWER TRANSMISSION LTD. (THE TATA POWER COMPANY LTD.) PROJECT : SUPPLY OF CRP & SAS AT 400/220kV METRO DEPOT GIS	CONTRACTOR : BAJEL PROJECTS LIMITED	Schneider Electric	TITLE : 400kV BUS REACTOR CONTROL & PROTN. PANEL (BAY-402) PU02A RELAY FUNCTIONS I/O DETAILS	PREPARED : BG REVIEWED : BG APPROVED : RKK	REVISION: Z DATE: 21-04-2025	SHT : 045 CONT: 046
PO. No.& Date : 6100001138 DATED: 28.04.2024			PANEL TYPE : +402BRA,+402BRB	DRG. NO.: I1-226736082-S-02		

This document is the exclusive property of Schneider Electric and shall not be used, copied or communicated to third parties without prior authorization.

SL.NO	PROTECTION FUNCTIONS	OUTPUT RELAYS																	
		RL 1	RL 2	RL 3	RL 4	RL 5	RL 6	RL 7	RL 8	RL 9	RL 10	RL 11	RL 12	RL 13	RL 14	RL 15	RL 16	WD1	WD2
	Schneider Electric	TO BB/LBB TRIP RLY (96A)	SPARE	TO 87R RELAY	TO BCU CKT.	SPARE	SPARE	SPARE	SPARE	TO BB/LBB TRIP RLY (96B)	SPARE	TO 21R RELAY	SPARE	TO BCU	SPARE	SPARE	TO BCU CKT.	TO BCU	SPARE
01	BB PROTN. OPTD	✔								✔									
02	LBB PROTN. OPTD	✔		✔						✔		✔		✔					
03	LBB OUT OF SERVICE				✔														
04	BB / LBB TRIP RLY (96A) FAULTY																✔		
05	RELAY FAULY																	✔	
06	SPARE		✔			✔	✔	✔	✔		✔		✔		✔	✔			✔

This document is the exclusive property of Schneider Electric and shall not be used, copied or communicated to third parties without prior authorization.

CUSTOMER : JALPURA KHURJA POWER TRANSMISSION LTD. (THE TATA POWER COMPANY LTD.) PROJECT : SUPPLY OF CRP & SAS AT 400/220kV METRO DEPOT GIS	CONTRACTOR : BAJEL PROJECTS LIMITED	Schneider Electric	TITLE : 400kV BUS REACTOR CONTROL & PROTN. PANEL (BAY-402) PU02A RELAY FUNCTIONS I/O DETAILS	PREPARED : BG REVIEWED : BG APPROVED : RKK REVISION: Z DATE: 21-04-2025 SHT : 046 CONT: 047
PO. No.& Date : 6100001138 DATED: 28.04.2024			PANEL TYPE : +402BRA,+402BRB	DRG. NO.: I1-226736082-S-02

This document is the exclusive property of Schneider Electric and shall not be used, copied or communicated to third parties without prior authorization.

+402BRB

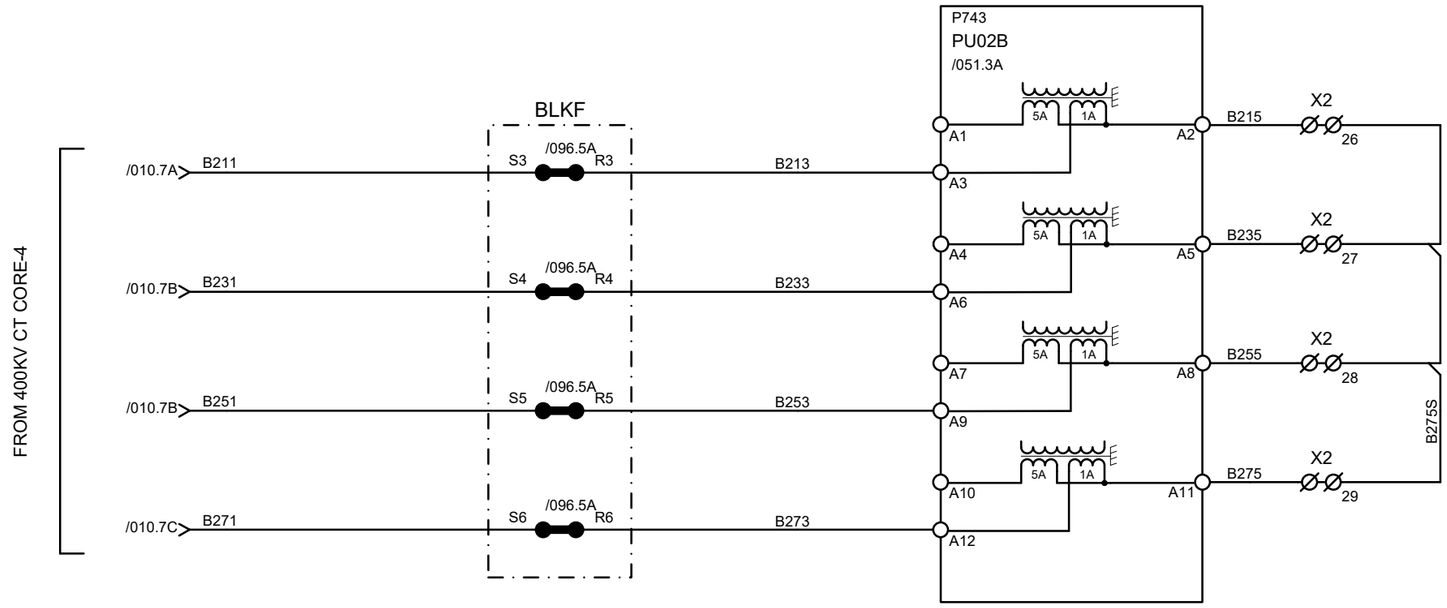

PU02B

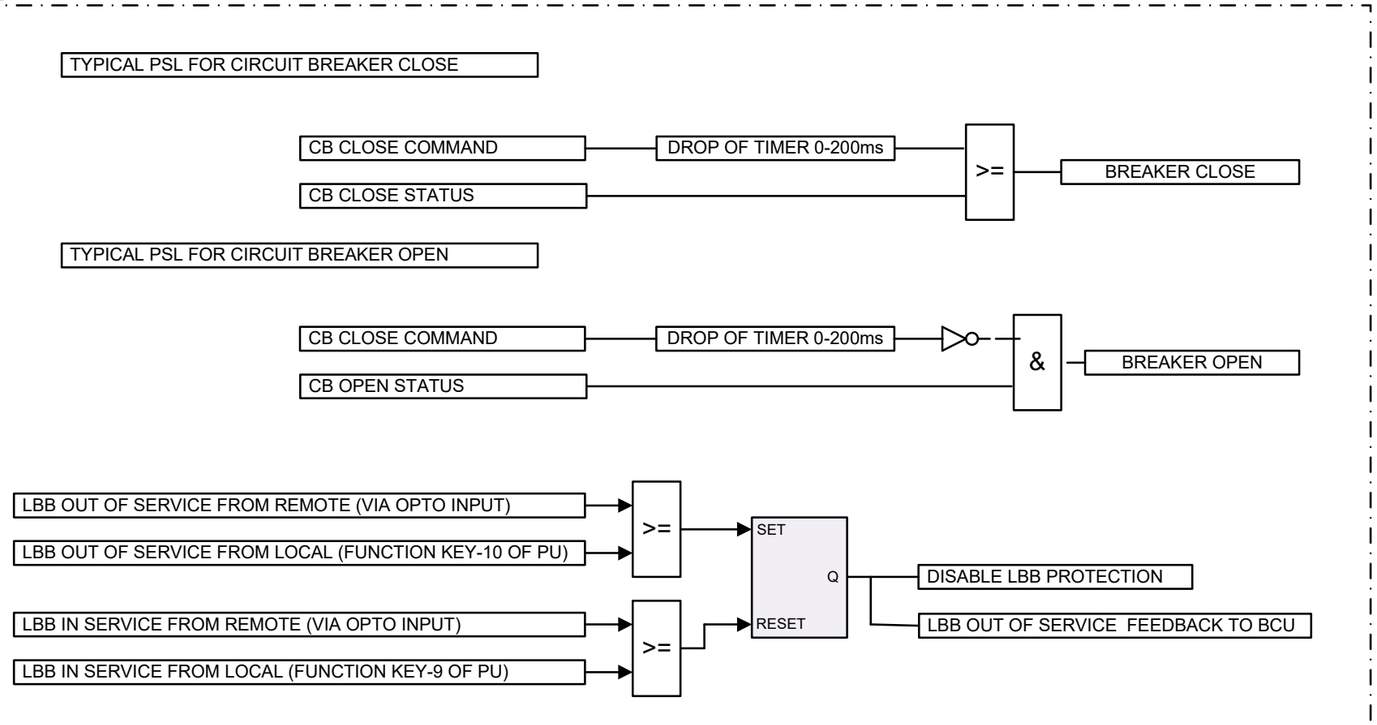

CUSTOMER : JALPURA KHURJA POWER TRANSMISSION LTD. (THE TATA POWER COMPANY LTD.) PROJECT : SUPPLY OF CRP & SAS AT 400/220kV METRO DEPOT GIS	CONTRACTOR : BAJEL PROJECTS LIMITED	Schneider Electric	TITLE : 400kV BUS REACTOR CONTROL & PROTN. PANEL (BAY-402) PU02B-CT CKT.	PREPARED : BG REVIEWED : BG APPROVED : RKK	REVISION: Z DATE: 21-04-2025	SHT :047 CONT: 048
PO. No.& Date : 6100001138 DATED: 28.04.2024			PANEL TYPE : +402BRA,+402BRB	DRG. NO.: I1-226736082-S-02		

DC SUPPLY FROM BUSBAR PANEL	MAIN CB R-PH CLOSED	MAIN CB Y-PH CLOSED	MAIN CB B-PH CLOSED	MAIN CB R-PH OPEN	MAIN CB Y-PH OPEN	MAIN CB B-PH OPEN	SPARE	SPARE

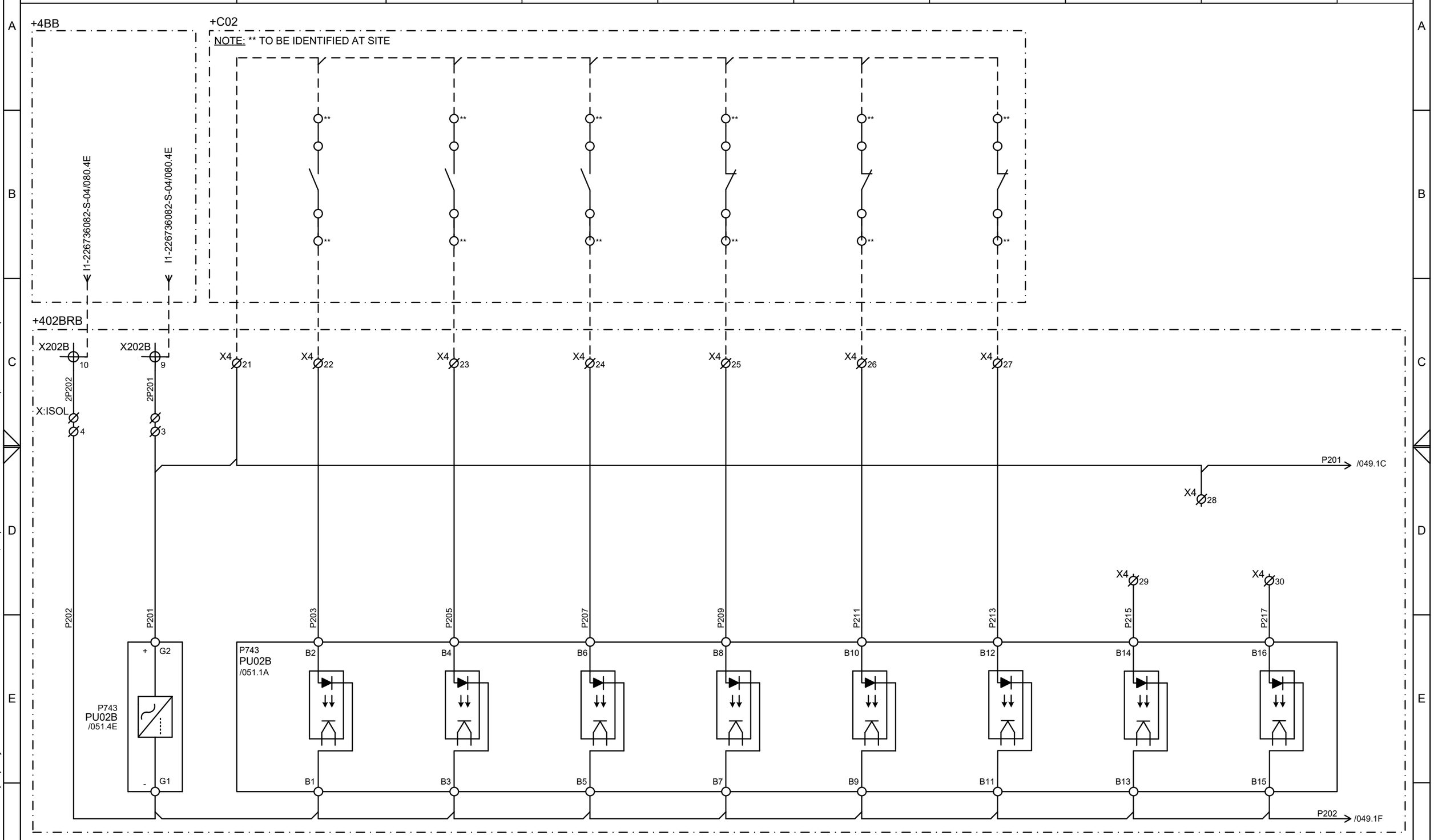

CUSTOMER : JALPURA KHURJA POWER TRANSMISSION LTD. (THE TATA POWER COMPANY LTD.) PROJECT : SUPPLY OF CRP & SAS AT 400/220kV METRO DEPOT GIS	CONTRACTOR : BAJEL PROJECTS LIMITED	Schneider Electric	TITLE : 400kV BUS REACTOR CONTROL & PROTN. PANEL (BAY-402) PU02B-OPTO CKT.	PREPARED : BG REVIEWED : BG APPROVED : RKK REVISION: Z DATE: 21-04-2025 SHT : 048 CONT: 049
PO. No.& Date : 6100001138 DATED: 28.04.2024			PANEL TYPE : +402BRA,+402BRB	DRG. NO.: I1-226736082-S-02

This document is the exclusive property of Schneider Electric and shall not be used, copied or communicated to third parties without prior authorization.

This document is the exclusive property of Schneider Electric and shall not be used, copied or communicated to third parties without prior authorization.

BB DISCONNECTOR Q1(QL1) OPEN	BB DISCONNECTOR Q1(QL1) CLOSE	BB DISCONNECTOR Q2(QL2) OPEN	BB DISCONNECTOR Q2(QL2) CLOSE	BB/LBB TRIP RELAY (96A) OPTD	BB/LBB TRIP RELAY (96B) OPTD	SPARE	SPARE

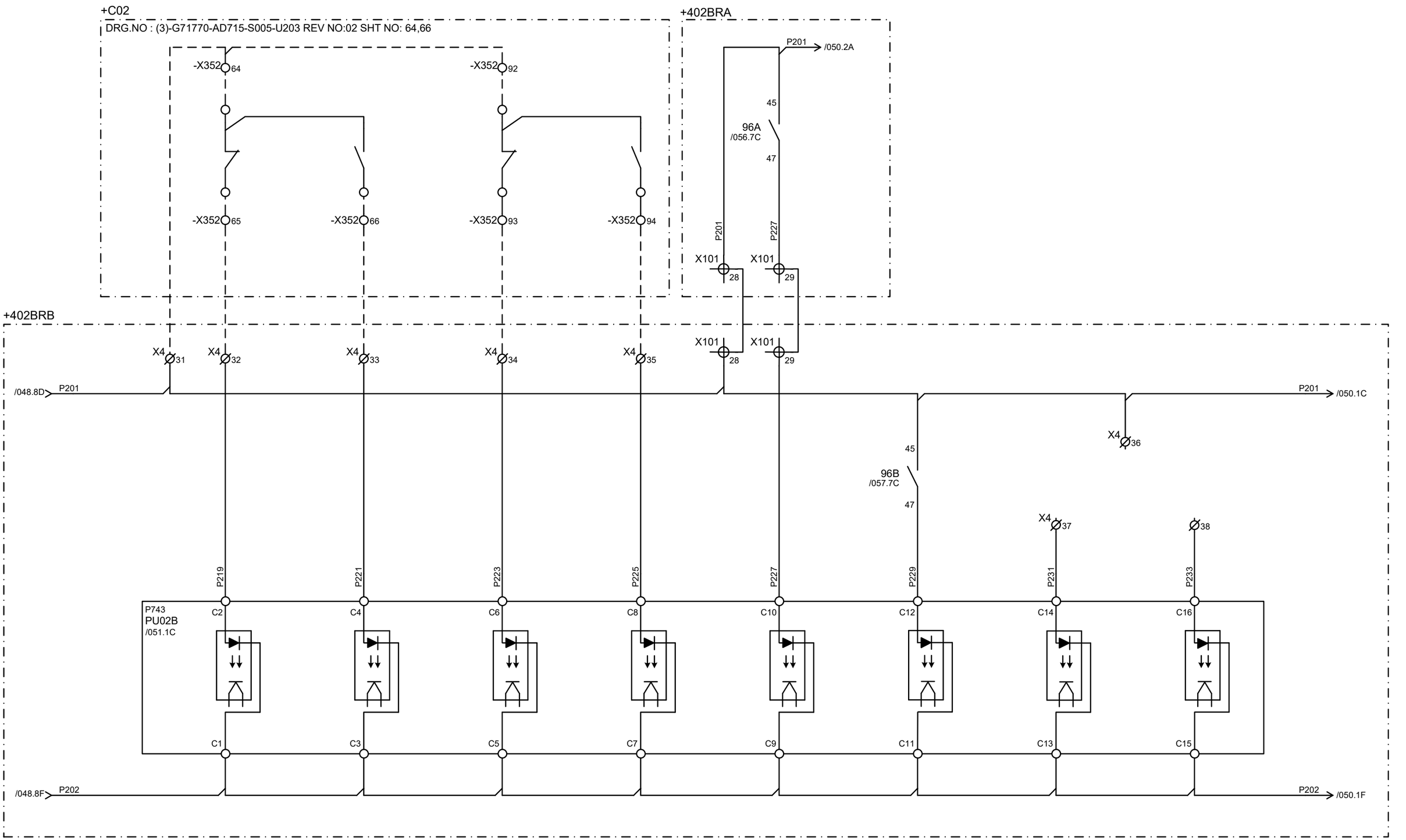

CUSTOMER : JALPURA KHURJA POWER TRANSMISSION LTD. (THE TATA POWER COMPANY LTD.) PROJECT : SUPPLY OF CRP & SAS AT 400/220kV METRO DEPOT GIS	CONTRACTOR : BAJEL PROJECTS LIMITED	Schneider Electric	TITLE : 400kV BUS REACTOR CONTROL & PROTN. PANEL (BAY-402) PU02B-OPTO CKT.	PREPARED : BG REVIEWED : BG APPROVED : RKK REVISION: Z DATE: 21-04-2025 SHT : 049 CONT: 050
PO. No.& Date : 6100001138 DATED: 28.04.2024			PANEL TYPE : +402BRA,+402BRB	DRG. NO.: I1-226736082-S-02

This document is the exclusive property of Schneider Electric and shall not be used, copied or communicated to third parties without prior authorization.

CB CLOSE COMMAND FEEDBACK	3-PH LBB INITIATION	LBB IN SERVICE	LBB OUT OF SERVICE	SPARE	SPARE	SPARE	BB/LBB TRIP RELAY (96B) SUPVN

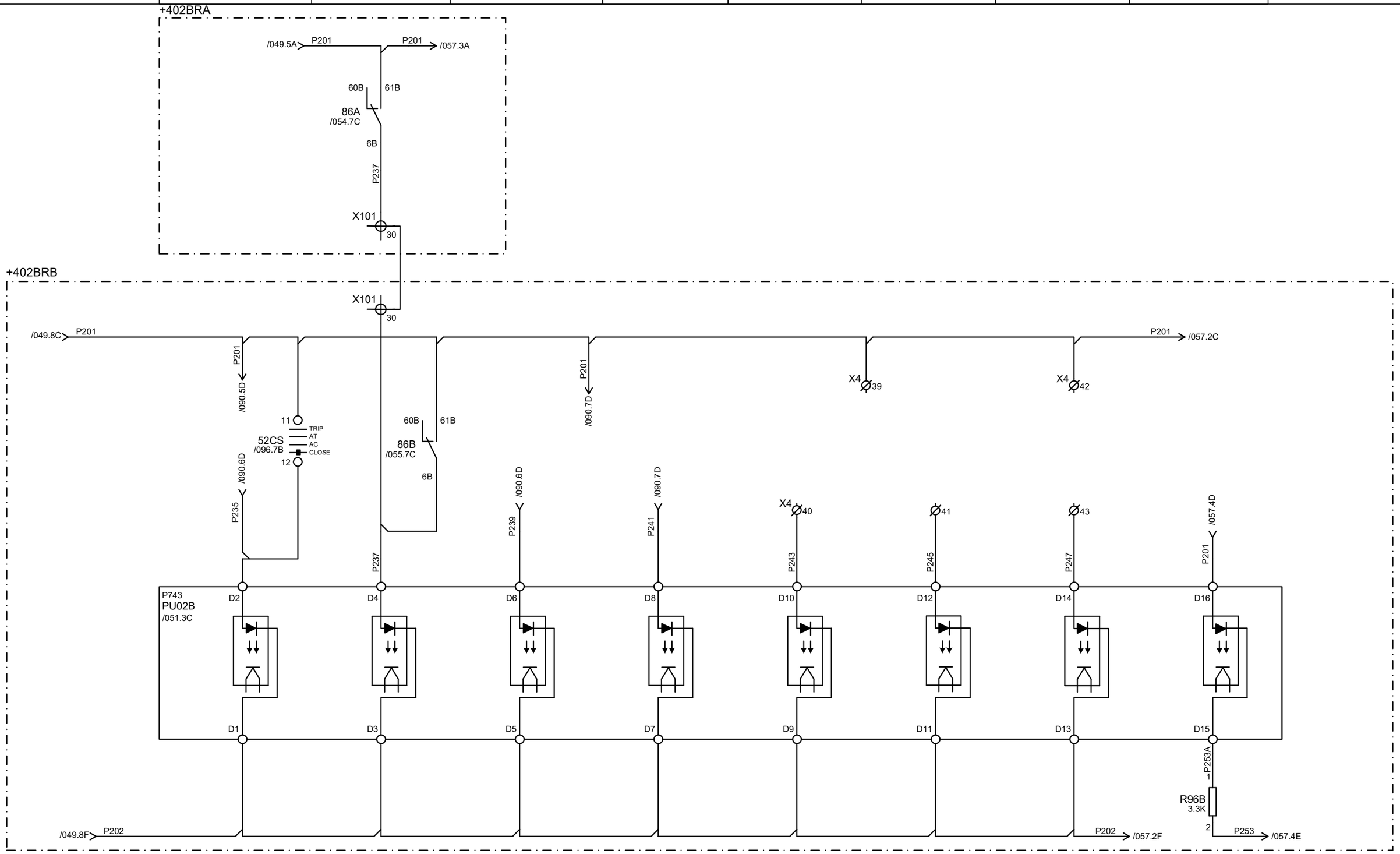

CUSTOMER : JALPURA KHURJA POWER TRANSMISSION LTD. (THE TATA POWER COMPANY LTD.) PROJECT : SUPPLY OF CRP & SAS AT 400/220kV METRO DEPOT GIS	CONTRACTOR : BAJEL PROJECTS LIMITED	Schneider Electric	TITLE : 400kV BUS REACTOR CONTROL & PROTN. PANEL (BAY-402) PU02B-OPTO CKT.	PREPARED : BG REVIEWED : BG APPROVED : RKK REVISION: Z DATE: 21-04-2025 SHT : 050 CONT: 051
PO. No.& Date : 6100001138 DATED: 28.04.2024			PANEL TYPE : +402BRA,+402BRB	DRG. NO.: I1-226736082-S-02

This document is the exclusive property of Schneider Electric and shall not be used, copied or communicated to third parties without prior authorization.

+402BRB

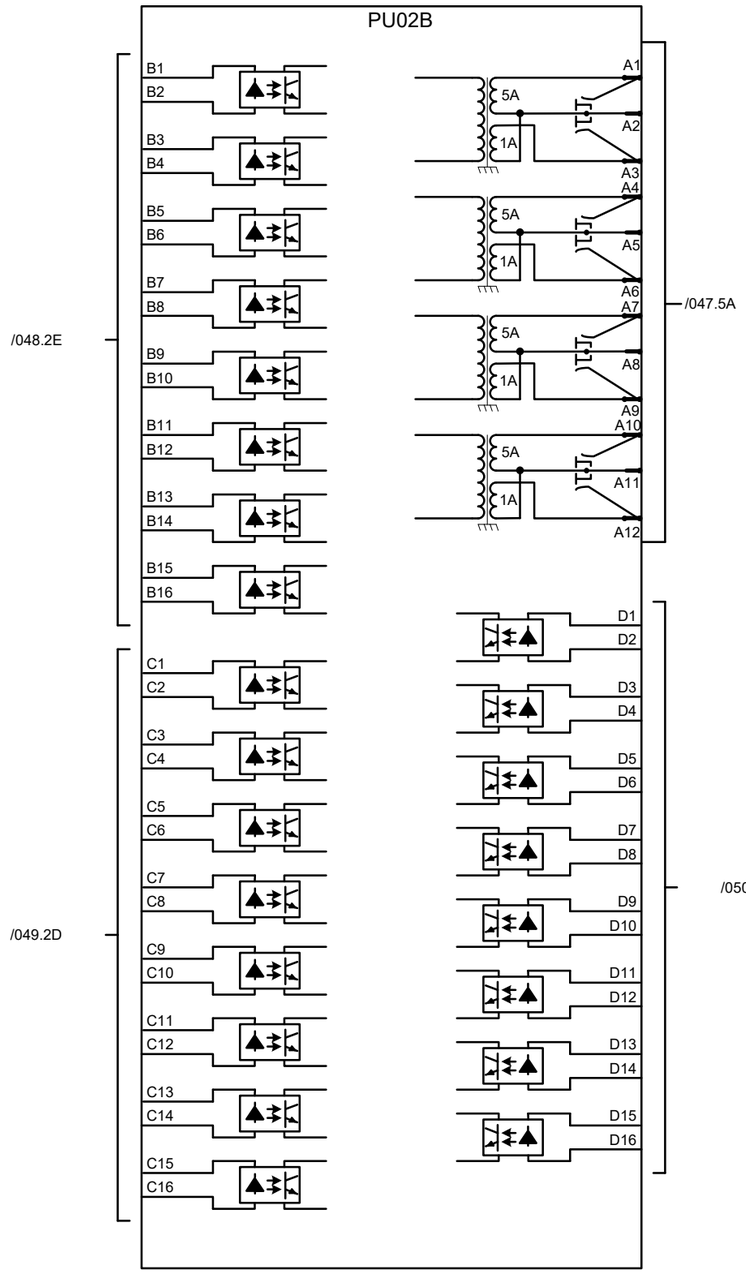

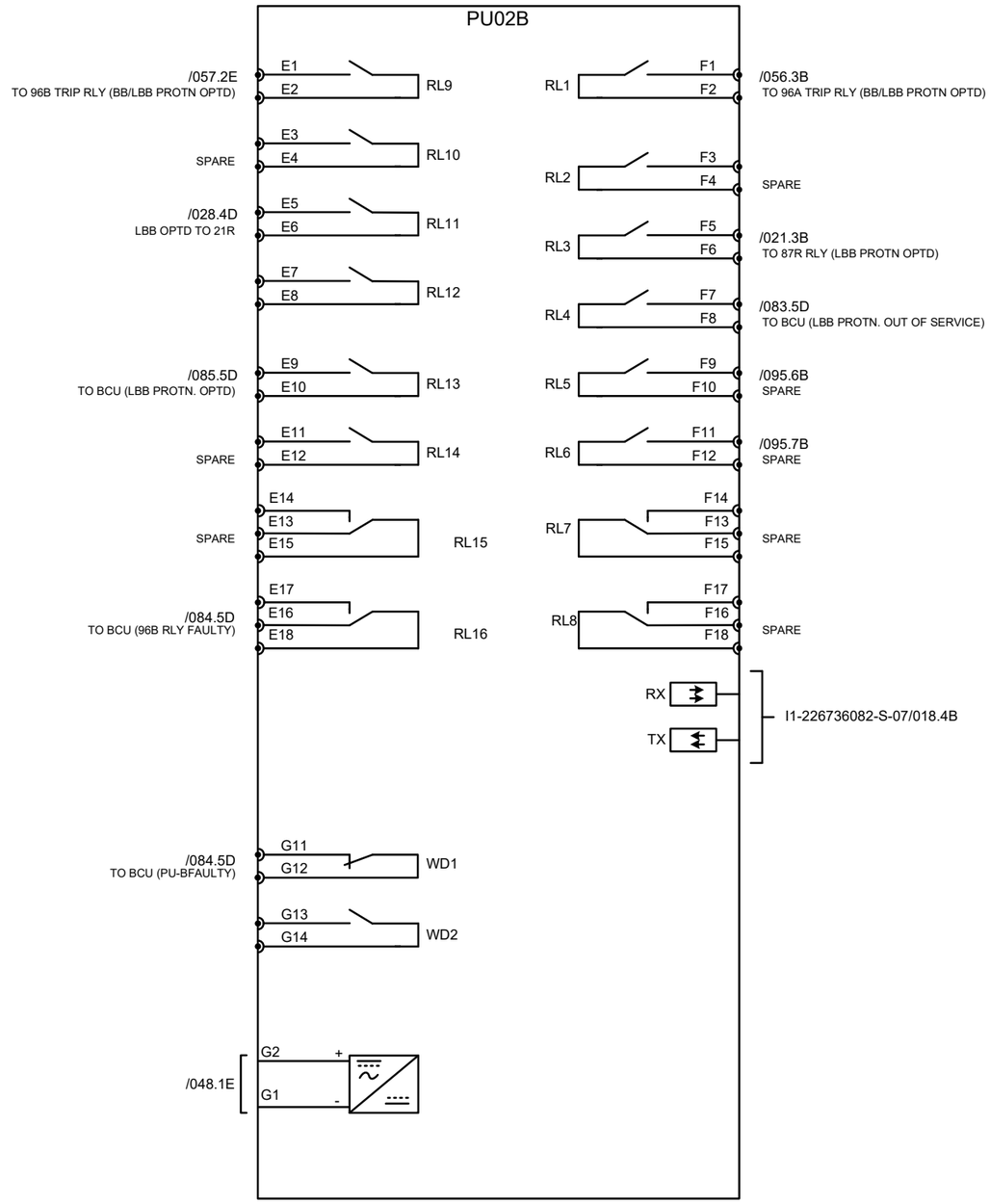

MiCOM P743 LED CONFIGARATION (DEDICATED LED's)

- TRIP
- ALARM
- OUT OF SERVICE
- HEALTHY

MiCOM 743 LED CONFIGARATION (LEFT SIDE LED)

- BB PROTN OPTD.
- LBB RE-TRIP OPERATED
- LBB OPERATED
- BUSBAR R-PH OPTD.
- BUSBAR Y-PH OPTD.
- BUSBAR B-PH OPTD.
- SPARE
- SPARE

MiCOM P743 LED CONFIGARATION (RIGHT SIDE LED)

- LBB IN SERVICE
- LBB OUT OF SERVICE
- SPARE
- SPARE
- SPARE
- SPARE
- SPARE
- SPARE
- LBB IN SERV CMD.
- LBB OUT OF SERV CMD.

CUSTOMER : JALPURA KHURJA POWER TRANSMISSION LTD. (THE TATA POWER COMPANY LTD.) PROJECT : SUPPLY OF CRP & SAS AT 400/220kV METRO DEPOT GIS	CONTRACTOR : BAJEL PROJECTS LIMITED	Schneider Electric	TITLE : 400kV BUS REACTOR CONTROL & PROTN. PANEL (BAY-402) PU02B CONTACT DISTRIBUTION	PREPARED : BG REVISION: Z SHT : 051
PO. No.& Date : 6100001138 DATED: 28.04.2024			PANEL TYPE : +402BRA,+402BRB	REVIEWED : BG DATE: 21-04-2025 CONT: 052
				APPROVED : RKK DRG. NO.: I1-226736082-S-02

SL.NO	STATUS (P743 RELAY)	OPTO INPUTS															
		I/P-1	I/P-2	I/P-3	I/P-4	I/P-5	I/P-6	I/P-7	I/P-8	I/P-9	I/P-10	I/P-11	I/P-12	I/P-13	I/P-14	I/P-15	I/P-16
		FOR DR	FOR DR	FOR DR	FOR DR	FOR DR	FOR DR	SPARE	SPARE	FOR DR	FOR DR	FOR DR	FOR DR	FOR DR	FOR DR	SPARE	SPARE
01	MAIN CB R-PH CLOSED	✔															
02	MAIN CB Y-PH CLOSED		✔														
03	MAIN CB B-PH CLOSED			✔													
04	MAIN CB R-PH OPEN				✔												
05	MAIN CB Y-PH OPEN					✔											
06	MAIN CB B-PH OPEN						✔										
07	BB DISCONNECTOR Q1(QL1) OPEN									✔							
08	BB DISCONNECTOR Q1(QL1) CLOSE										✔						
09	BB DISCONNECTOR Q2(QL2) OPEN											✔					
10	BB DISCONNECTOR Q2(QL2) CLOSE												✔				
11	BB/LBB TRIP RLY (96A) OPTD FOR 3PH LBB INITIATION													✔			
12	BB/LBB TRIP RLY (96B) OPTD FOR 3PH LBB INITIATION														✔		
13	SPARE							✔	✔							✔	✔

SL.NO	STATUS (P743 RELAY)	OPTO INPUTS							
		I/P-17	I/P-18	I/P-19	I/P-20	I/P-21	I/P-22	I/P-23	I/P-24
		FOR DR	FOR DR	FOR DR	FOR DR	SPARE	SPARE	SPARE	FOR SUPERVISION
14	CB CLOSE COMMAND FEEDBACK	✔							
15	3-PH LBB INITIATION		✔						
16	LBB IN SERVICE			✔					
17	LBB OUT OF SERVICE				✔				
18	BB/LBB TRIP RLY (96A) SUPVN.								✔
19	SPARE					✔	✔	✔	

CUSTOMER : JALPURA KHURJA POWER TRANSMISSION LTD. (THE TATA POWER COMPANY LTD.) PROJECT : SUPPLY OF CRP & SAS AT 400/220kV METRO DEPOT GIS	CONTRACTOR : BAJEL PROJECTS LIMITED		TITLE : 400kV BUS REACTOR CONTROL & PROTN. PANEL (BAY-402) PU02B - INPUTS & OUTPUTS CONFIGURATION	PREPARED : BG REVIEWED : BG APPROVED : RKK	REVISION: Z DATE: 21-04-2025	SHT : 052 CONT: 053
PO. No.& Date : 6100001138 DATED: 28.04.2024			PANEL TYPE : +402BRA,+402BRB	DRG. NO.: I1-226736082-S-02		

This document is the exclusive property of Schneider Electric and shall not be used, copied or communicated to third parties without prior authorization.

SL.NO	PROTECTION FUNCTIONS	OUTPUT RELAYS																	
		RL 1	RL 2	RL 3	RL 4	RL 5	RL 6	RL 7	RL 8	RL 9	RL 10	RL 11	RL 12	RL 13	RL 14	RL 15	RL 16	WD1	WD2
	Schneider Electric	TO BB/LBB TRIP RLY (96A)	SPARE	TO 87R RELAY	TO BCU CKT.	SPARE	SPARE	SPARE	SPARE	TO BB/LBB TRIP RLY (96B)	SPARE	TO 21R RELAY	SPARE	TO BCU	SPARE	SPARE	TO BCU CKT.	TO BCU	SPARE
01	BB PROTN. OPTD	✔								✔									
02	LBB PROTN. OPTD	✔		✔						✔		✔		✔					
03	LBB OUT OF SERVICE				✔														
04	BB / LBB TRIP RLY (96B) FAULTY																✔		
05	RELAY FAULY																	✔	
06	SPARE		✔			✔	✔	✔	✔		✔		✔		✔	✔			✔

This document is the exclusive property of Schneider Electric and shall not be used, copied or communicated to third parties without prior authorization.

CUSTOMER : JALPURA KHURJA POWER TRANSMISSION LTD. (THE TATA POWER COMPANY LTD.) PROJECT : SUPPLY OF CRP & SAS AT 400/220kV METRO DEPOT GIS	CONTRACTOR : BAJEL PROJECTS LIMITED	Schneider Electric	TITLE : 400kV BUS REACTOR CONTROL & PROTN. PANEL (BAY-402) PU02B RELAY FUNCTIONS I/O DETAILS	PREPARED : BG REVIEWED : BG APPROVED : RKK REVISION: Z DATE: 21-04-2025 SHT : 053 CONT: 054
PO. No.& Date : 6100001138 DATED: 28.04.2024			PANEL TYPE : +402BRA,+402BRB	DRG. NO.: I1-226736082-S-02

This document is the exclusive property of Schneider Electric and shall not be used, copied or communicated to third parties without prior authorization.

DIFF/ 51NS TRIP OPTD.	BACKUP IMPEDANCE / BACKUP OC EF PROTN.OPTD	REF PROTN TRIP OPTD.	BUCHHOLZ RLY-1 TRIP/ WTI HIGH TRIP/SPRV TRIP	PRD-1 TRIP/PRD-2 TRIP/ PNRV TRIP/OTI HIGH TRIP	CUSTOMER USE	86A SUPERVISION	TRIP RELAY RESET

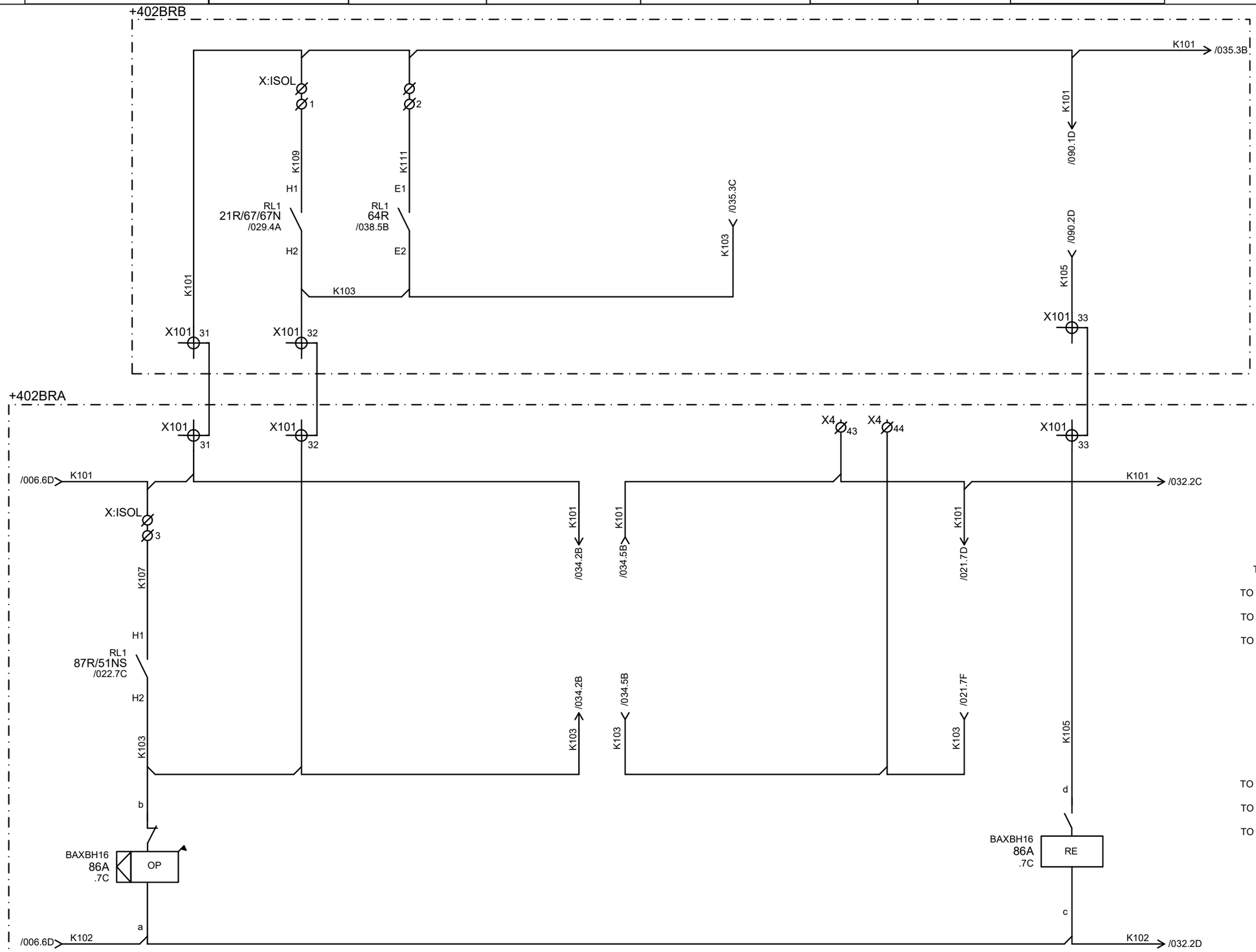

	86A b	OP	a	.1E
	d	RE	c	.6E
TO 400kV CB CLOSING I/L	10A 11A		1A	/058.1D
TO 400kV CB TC-1 R-PH CKT	20A 21A		2A	/060.2C
TO 400kV CB TC-1 Y-PH CKT	30A 31A		3A	/060.2C
TO 400kV CB TC-1 B-PH CKT	40A 41A		4A	/060.3C
TO NIFPS	50A 51A		5A	/093.1D
LBB INI. TO PU02A	60A 61A		6A	/043.2D
TO 87T RLY	70A 71A		7A	/019.4D
TO BCU CKT.	80A 81A		8A	/085.2B
SPARE	10B 11B		1B	/094.6B
TO 400kV CB TC-2 R-PH CKT	20B 21B		2B	/063.3B
TO 400kV CB TC-2 Y-PH CKT	30B 31B		3B	/063.3B
TO 400kV CB TC-2 B-PH CKT	40B 41B		4B	/063.3B
	50B 51B		5B	
LBB INI. TO PU02B	60B 61B		6B	/050.3B
TO 21R/67/67N RLY	70B 71B		7B	/027.2B
SPARE	80B 81B		8B	/094.7B

CUSTOMER : JALPURA KHURJA POWER TRANSMISSION LTD. (THE TATA POWER COMPANY LTD.) PROJECT : SUPPLY OF CRP & SAS AT 400/220kV METRO DEPOT GIS	CONTRACTOR : BAJEL PROJECTS LIMITED	Schneider Electric	TITLE : 400kV BUS REACTOR CONTROL & PROTN. PANEL (BAY-402) GROUP-A TRIP RELAY
PO. No.& Date : 6100001138 DATED: 28.04.2024			PANEL TYPE : +402BRA,+402BRB

PREPARED : BG	REVISION: Z	SHT :054
REVIEWED : BG	DATE: 21-04-2025	CONT: 055
APPROVED : RKK		
DRG. NO.: I1-226736082-S-02		

This document is the exclusive property of Schneider Electric and shall not be used, copied or communicated to third parties without prior authorization.

REF/ LV OVER FLUX TRIP OPTD.	BACKUP IMPEDANCE /HV DIR O/C & E/F PROTN.OPTD	DIFF/ HV OVER FLUX TRIP OPTD.	BUCHHOLZ RLY-1 TRIP/ WTI HIGH TRIP/SPRV TRIP	PRD-1 TRIP/PRD-2 TRIP/ PNRV TRIP/OTI HIGH TRIP	CUSTOMER USE	86B SUPVN	TRIP RELAY RESET

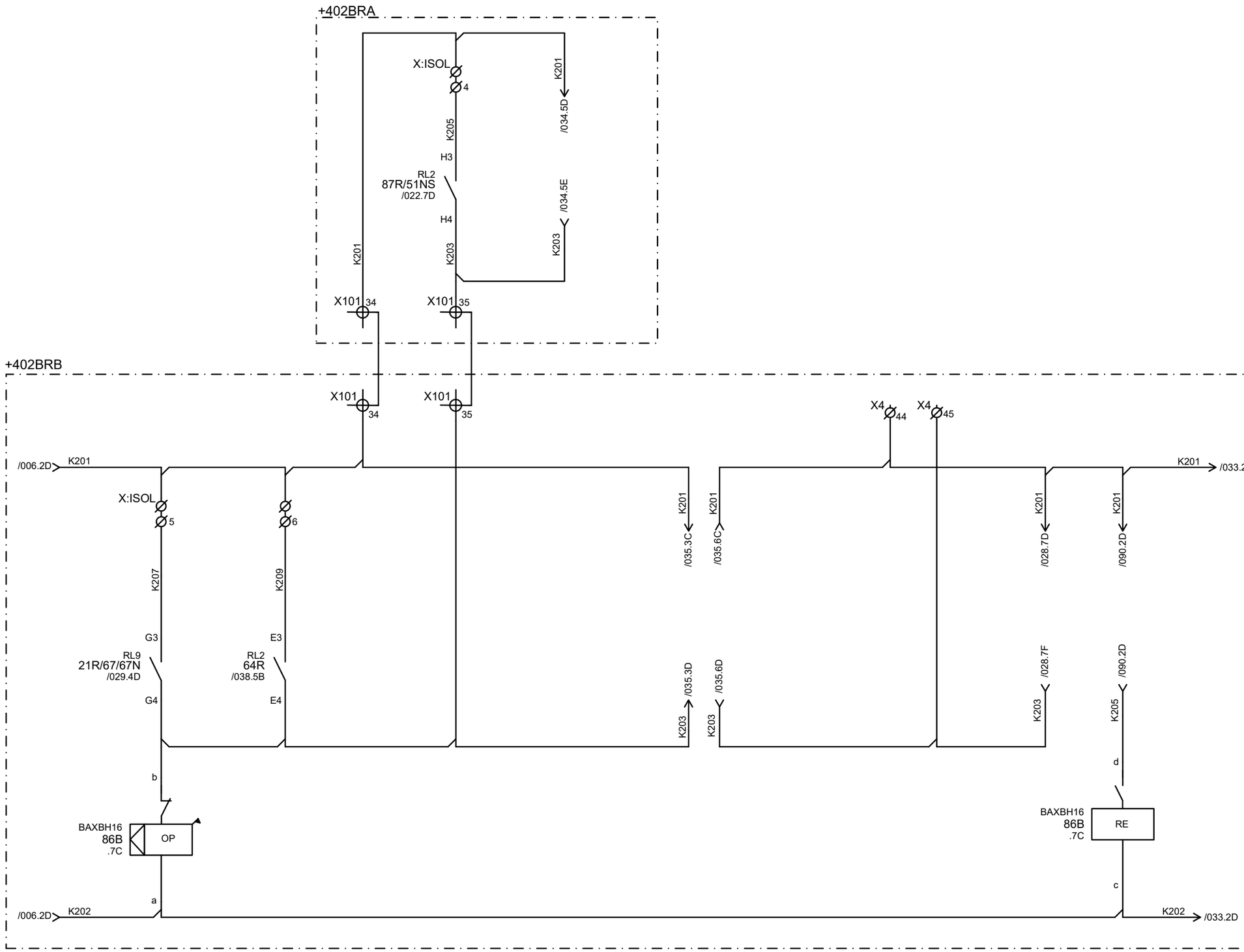

CUSTOMER : JALPURA KHURJA POWER TRANSMISSION LTD. (THE TATA POWER COMPANY LTD.) PROJECT : SUPPLY OF CRP & SAS AT 400/220kV METRO DEPOT GIS	CONTRACTOR : BAJEL PROJECTS LIMITED	Schneider Electric	TITLE : 400kV BUS REACTOR CONTROL & PROTN. PANEL (BAY-402) GROUP-B TRIP RELAY	PREPARED : BG REVIEWED : BG APPROVED : RKK REVISION: Z DATE: 21-04-2025 SHT :055 CONT:056
PO. No.& Date : 6100001138 DATED: 28.04.2024			PANEL TYPE : +402BRA,+402BRB	DRG. NO.: I1-226736082-S-02

BB/LBB PROTN OPTD PU-A	BB/LBB PROTN OPTD PU-B	TRIP RELAY SUPERVISION	TRIP RELAY RESET FROM BCU

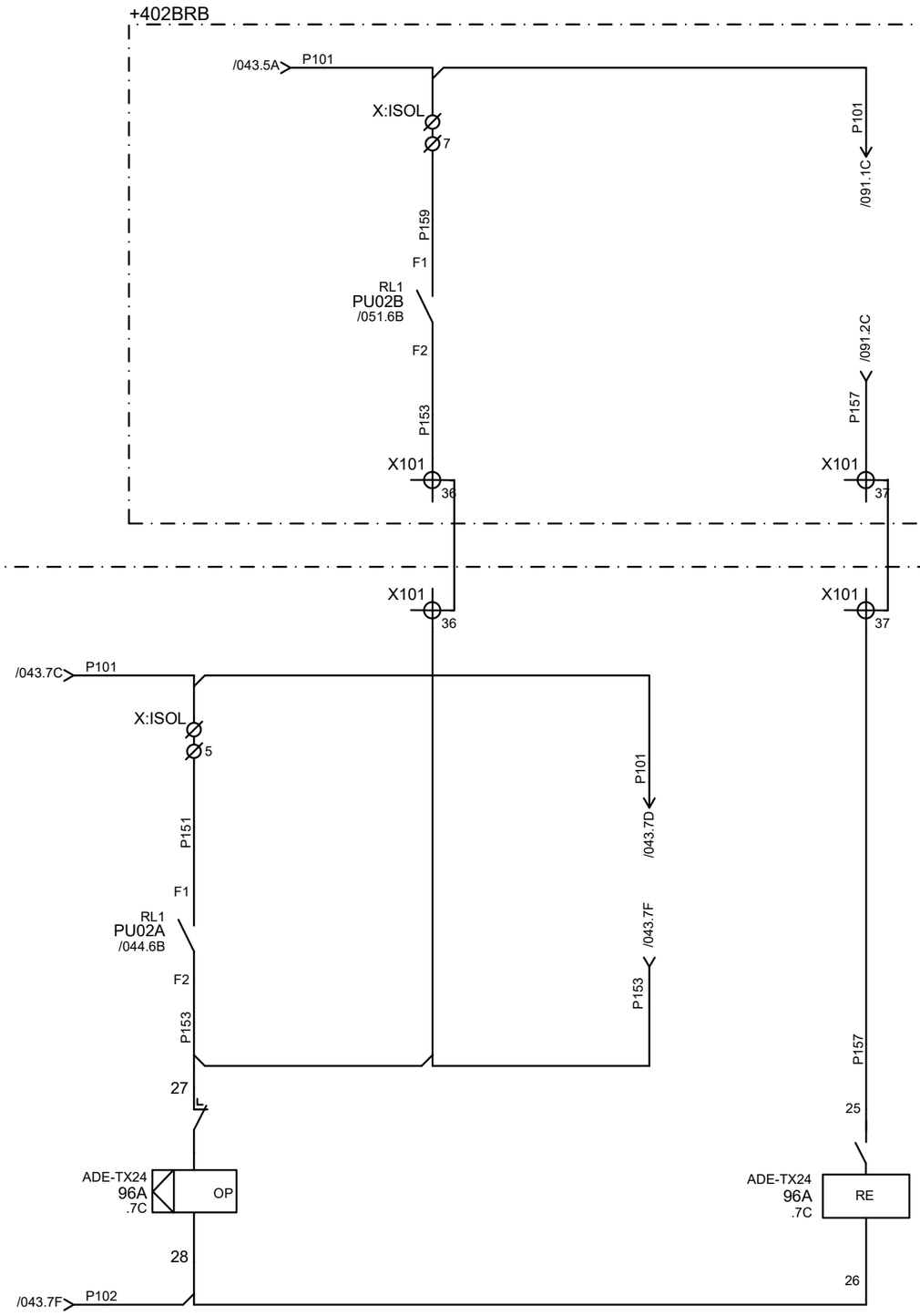

		96A		
		27	OP	28	.2E
		25	RE	26	.5E
TO 400KV CB CLOSING INTERLOCK		1		3	/058.2D
		2		4	
TO 400kV CB TC-1 R-PH CKT		5		7	/060.3C
TO 400kV CB TC-1 Y-PH CKT		9		11	/060.4C
TO 400kV CB TC-1 B-PH CKT		13		15	/060.4C
SPARE		17		19	/094.7B
TO PU-A (LBB INIT.)		6		8	/042.5D
TO 87R RLY		10		12	/019.5D
TO BCU		14		16	/085.2B
SPARE		18		20	/094.1C
		29		31	
		30		32	
TO 400kV CB TC-2 R-PH CKT		33		35	/063.4B
TO 400kV CB TC-2 Y-PH CKT		37		39	/063.5B
TO 400kV CB TC-2 B-PH CKT		41		43	/063.5B
TO PU-B (LBB INIT.)		45		47	/049.5B
TO 64R		34		36	/037.4B
		38		40	
		42		44	
		46		48	

CUSTOMER : JALPURA KHURJA POWER TRANSMISSION LTD. (THE TATA POWER COMPANY LTD.) PROJECT : SUPPLY OF CRP & SAS AT 400/220kV METRO DEPOT GIS	CONTRACTOR : BAJEL PROJECTS LIMITED	Schneider Electric	TITLE : 400kV BUS REACTOR CONTROL & PROTN. PANEL (BAY-402) GROUP-B TRIP RELAY CKT.
PO. No.& Date : 6100001138 DATED: 28.04.2024			PANEL TYPE : +402BRA,+402BRB

PREPARED : BG	REVISION: Z	SHT :056
REVIEWED : BG	DATE: 21-04-2025	CONT: 057
APPROVED : RKK		
DRG. NO.: I1-226736082-S-02		

This document is the exclusive property of Schneider Electric and shall not be used, copied or communicated to third parties without prior authorization.

BB/LBB PROTN OPTD PU-B	BB/LBB PROTN OPTD PU-A	TRIP RELAY SUPERVISION	TRIP RELAY RESET FROM BCU

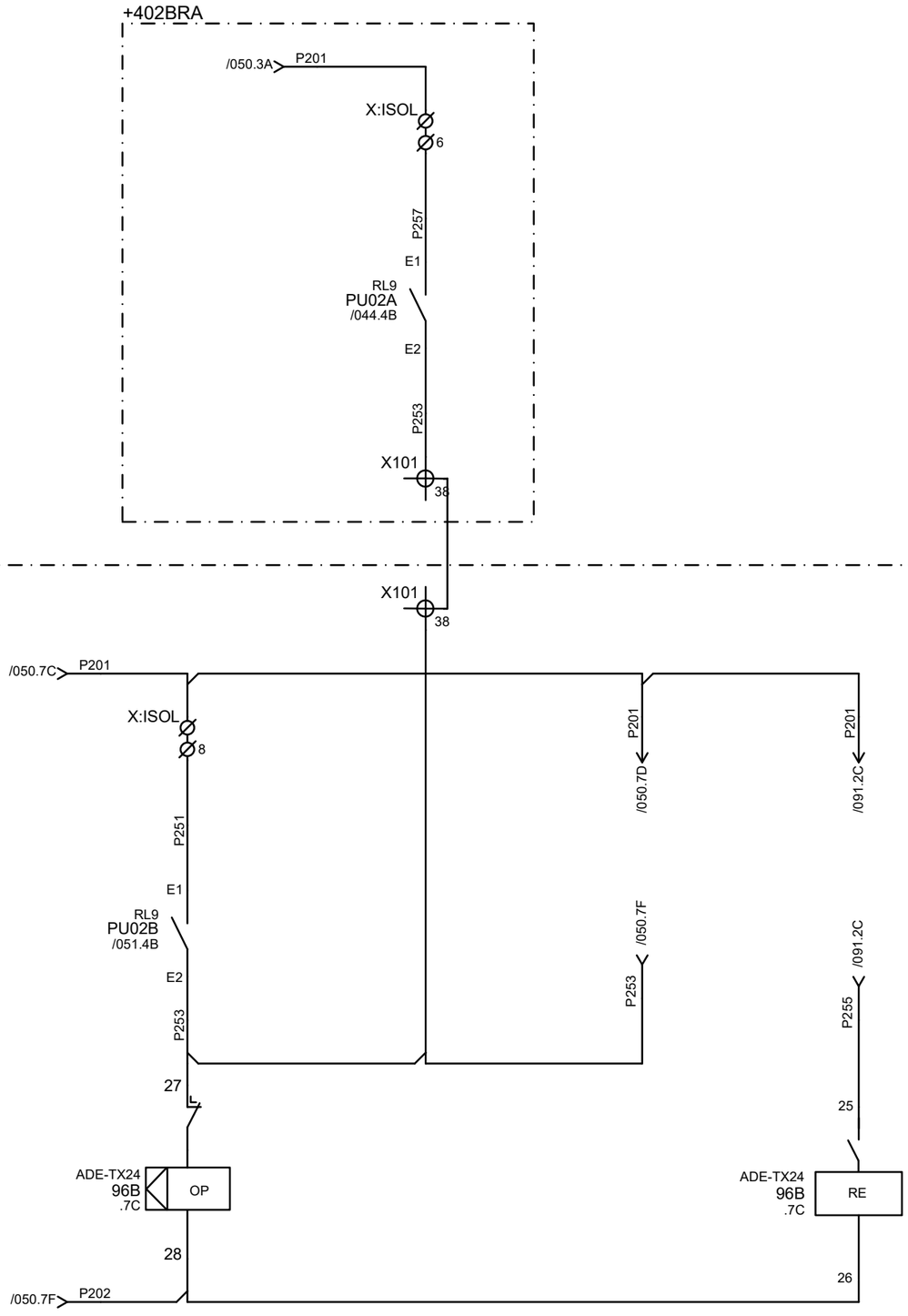

	96B			
	27	OP	28	.2E
	25	RE	26	.5E
TO 400KV CB CLOSING INTERLOCK	1		3	/058.2B
	2		4	
TO 400kV CB TC-1 R-PH CKT	5		7	/061.3C
TO 400kV CB TC-1 Y-PH CKT	9		11	/061.4C
TO 400kV CB TC-1 B-PH CKT	13		15	/061.4C
SPARE	17		19	/095.3D
TO PU-A (LBB INIT.)	6		8	/042.6B
TO 87T RLY	10		12	/021.4B
TO BCU	14		16	/085.2D
SPARE	18		20	/095.4D
	29		31	
	30		32	
TO 400kV CB TC-2 R-PH CKT	33		35	/064.3C
TO 400kV CB TC-2 Y-PH CKT	37		39	/064.4C
TO 400kV CB TC-B C-PH CKT	41		43	/064.4C
TO PU-B (LBB INIT.)	45		47	/049.6D
TO 21R	34		36	/028.4D
	38		40	
	42		44	
	46		48	

CUSTOMER : JALPURA KHURJA POWER TRANSMISSION LTD. (THE TATA POWER COMPANY LTD.) PROJECT : SUPPLY OF CRP & SAS AT 400/220kV METRO DEPOT GIS	CONTRACTOR : BAJEL PROJECTS LIMITED	Schneider Electric	TITLE : 400kV BUS REACTOR CONTROL & PROTN. PANEL (BAY-402) GROUP-B TRIP RELAY CKT.	PREPARED : BG REVISION: Z SHT : 057
PO. No.& Date : 6100001138 DATED: 28.04.2024				REVIEWED : BG DATE: 21-04-2025 CONT: 058
			PANEL TYPE : +402BRA,+402BRB	APPROVED : RKK DRG. NO.: I1-226736082-S-02

This document is the exclusive property of Schneider Electric and shall not be used, copied or communicated to third parties without prior authorization.

GRP-A TRIP RELAY NOT OPTD.	BUSBAR PROTN NOT OPTD.	GRP-B TRIP RELAY NOT OPTD.	SYNC CHECK OK	(401-52)CB CLOSE COMMAND +VE ISOLATION	(401-52)CB CLOSE COMMAND -VE ISOLATION

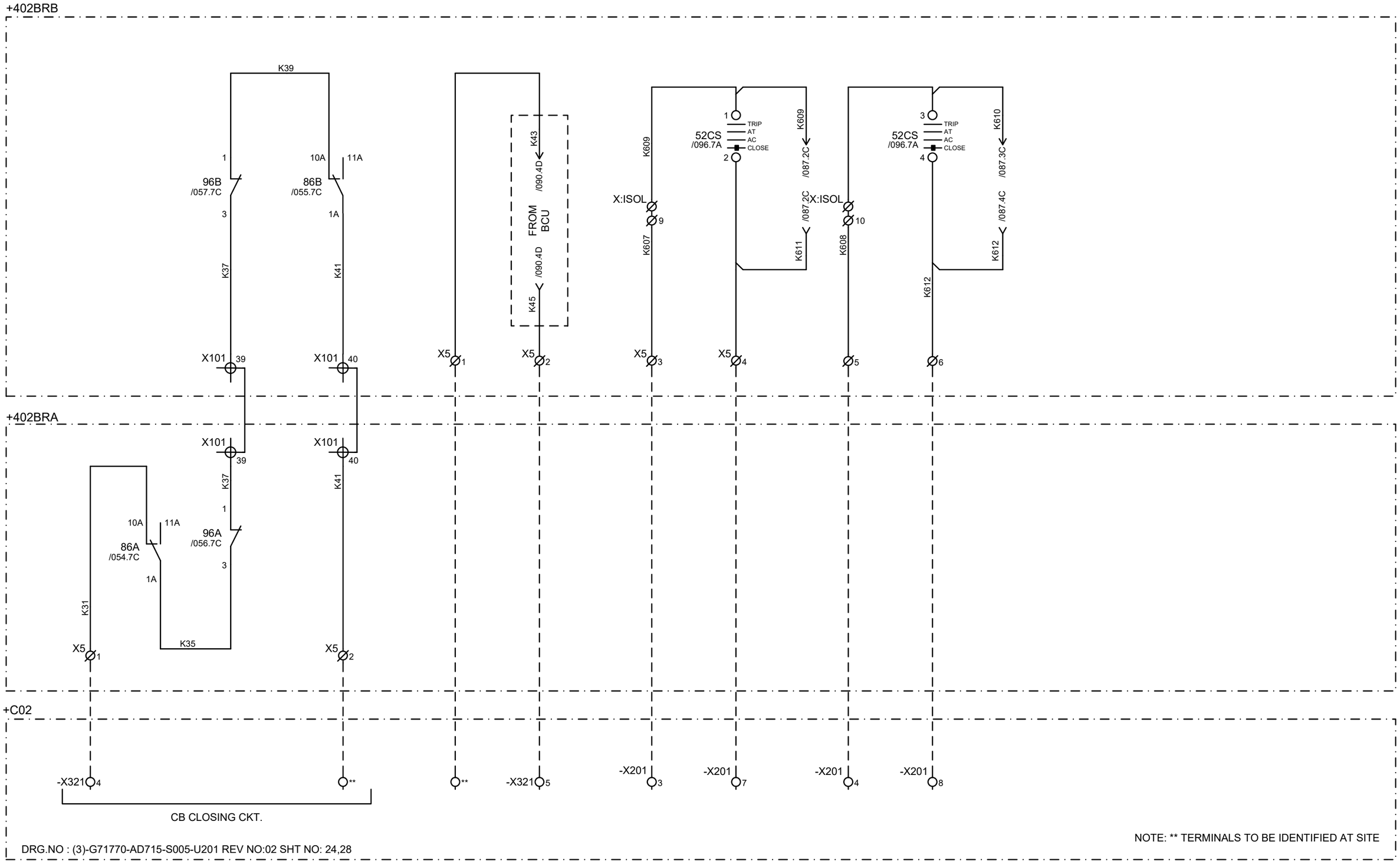

DRG.NO : (3)-G71770-AD715-S005-U201 REV NO:02 SHT NO: 24,28

NOTE: ** TERMINALS TO BE IDENTIFIED AT SITE

CUSTOMER : JALPURA KHURJA POWER TRANSMISSION LTD. (THE TATA POWER COMPANY LTD.) **PROJECT :** SUPPLY OF CRP & SAS AT 400/220kV METRO DEPOT GIS	**CONTRACTOR : BAJEL PROJECTS LIMITED**	Schneider Electric	**TITLE : 400kV BUS REACTOR CONTROL & PROTN. PANEL (BAY-402) CB CLOSING CKT.**	PREPARED : BG REVIEWED : BG APPROVED : RKK REVISION: Z DATE: 21-04-2025 SHT :058 CONT: 059
PO. No.& Date : 6100001138 DATED: 28.04.2024			**PANEL TYPE : +402BRA,+402BRB**	**DRG. NO.: I1-226736082-S-02**

This document is the exclusive property of Schneider Electric and shall not be used, copied or communicated to third parties without prior authorization.

(401-52)CB OPEN COMMAND + VE ISOLATION	(401-52)CB OPEN COMMAND - VE ISOLATION

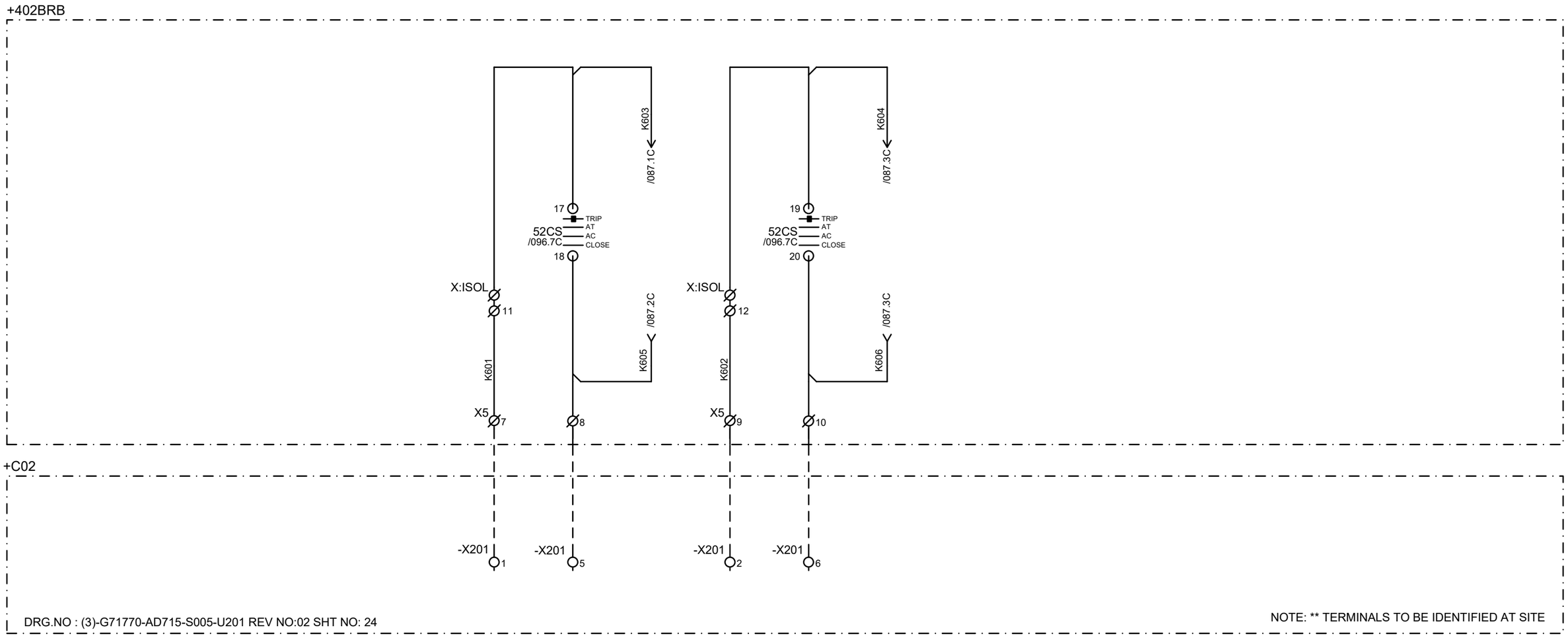

DRG.NO : (3)-G71770-AD715-S005-U201 REV NO:02 SHT NO: 24

NOTE: ** TERMINALS TO BE IDENTIFIED AT SITE

CUSTOMER : JALPURA KHURJA POWER TRANSMISSION LTD. (THE TATA POWER COMPANY LTD.) PROJECT : SUPPLY OF CRP & SAS AT 400/220kV METRO DEPOT GIS	CONTRACTOR : BAJEL PROJECTS LIMITED	Schneider Electric	TITLE : 400kV BUS REACTOR CONTROL & PROTN. PANEL (BAY-402) CB CLOSING CKT.	PREPARED : BG REVIEWED : BG APPROVED : RKK	REVISION: Z DATE: 21-04-2025	SHT :059 CONT:060
PO. No.& Date : 6100001138 DATED: 28.04.2024			PANEL TYPE : +402BRA,+402BRB	DRG. NO.: I1-226736082-S-02		

This document is the exclusive property of Schneider Electric and shall not be used, copied or communicated to third parties without prior authorization.

GROUP-A TRIP RELAY (86A) OPTD.

MAIN CB LBB OPTD, LBB RE-TRIP

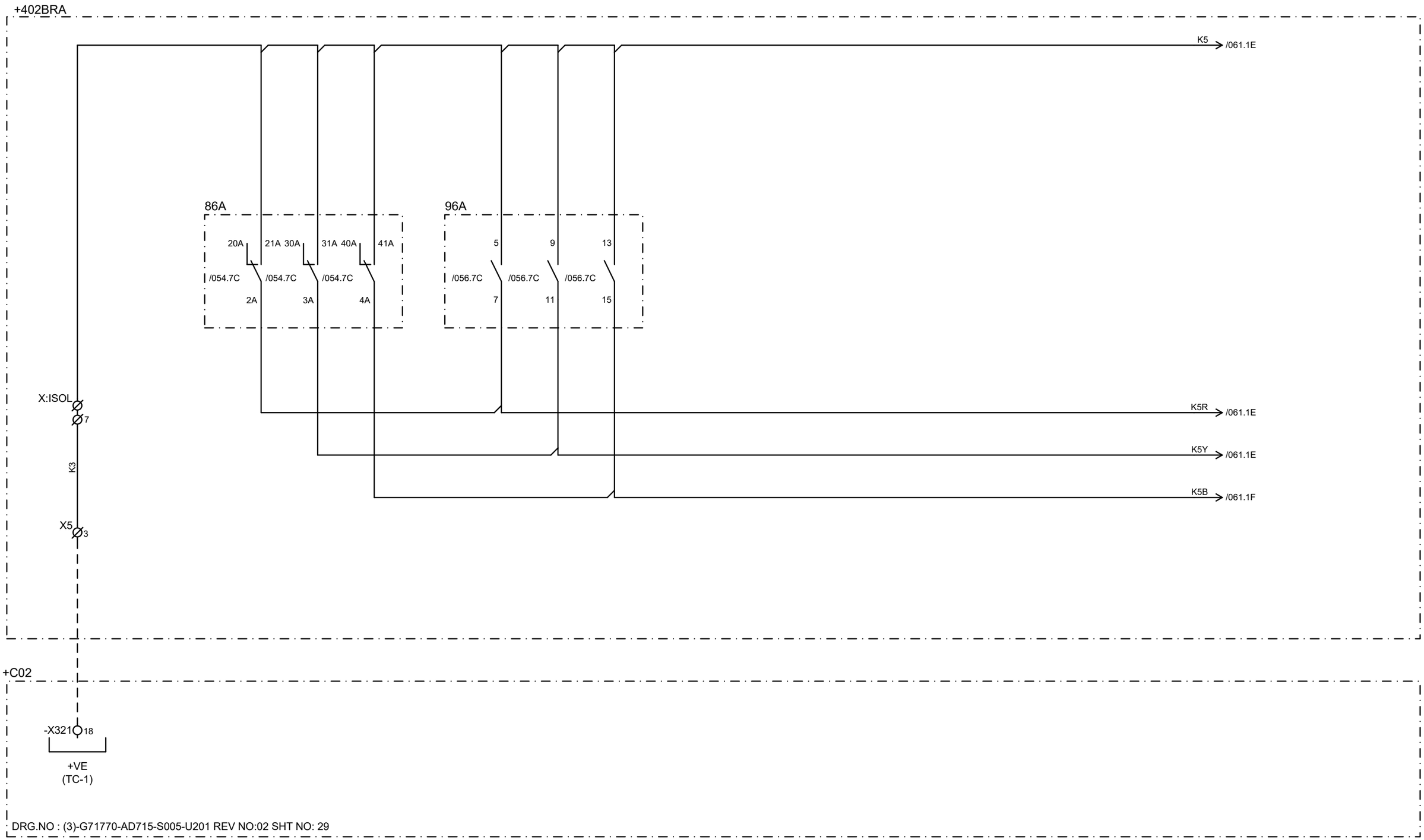

CUSTOMER : JALPURA KHURJA POWER TRANSMISSION LTD. (THE TATA POWER COMPANY LTD.) PROJECT : SUPPLY OF CRP & SAS AT 400/220kV METRO DEPOT GIS	CONTRACTOR : BAJEL PROJECTS LIMITED	Schneider Electric	TITLE : 400kV BUS REACTOR CONTROL & PROTN. PANEL (BAY-402) CB TC-1 CONTROL CKT.	PREPARED : BG REVIEWED : BG APPROVED : RKK	REVISION: Z DATE: 21-04-2025	SHT :060 CONT: 061
PO. No.& Date : 6100001138 DATED: 28.04.2024			PANEL TYPE : +402BRA,+402BRB	DRG. NO.: I1-226736082-S-02		

This document is the exclusive property of Schneider Electric and shall not be used, copied or communicated to third parties without prior authorization.

GROUP-B TRIP RELAY (86B) OPTD.	MAIN CB LBB OPTD, LBB RE-TRIP	CUSTOMER USE

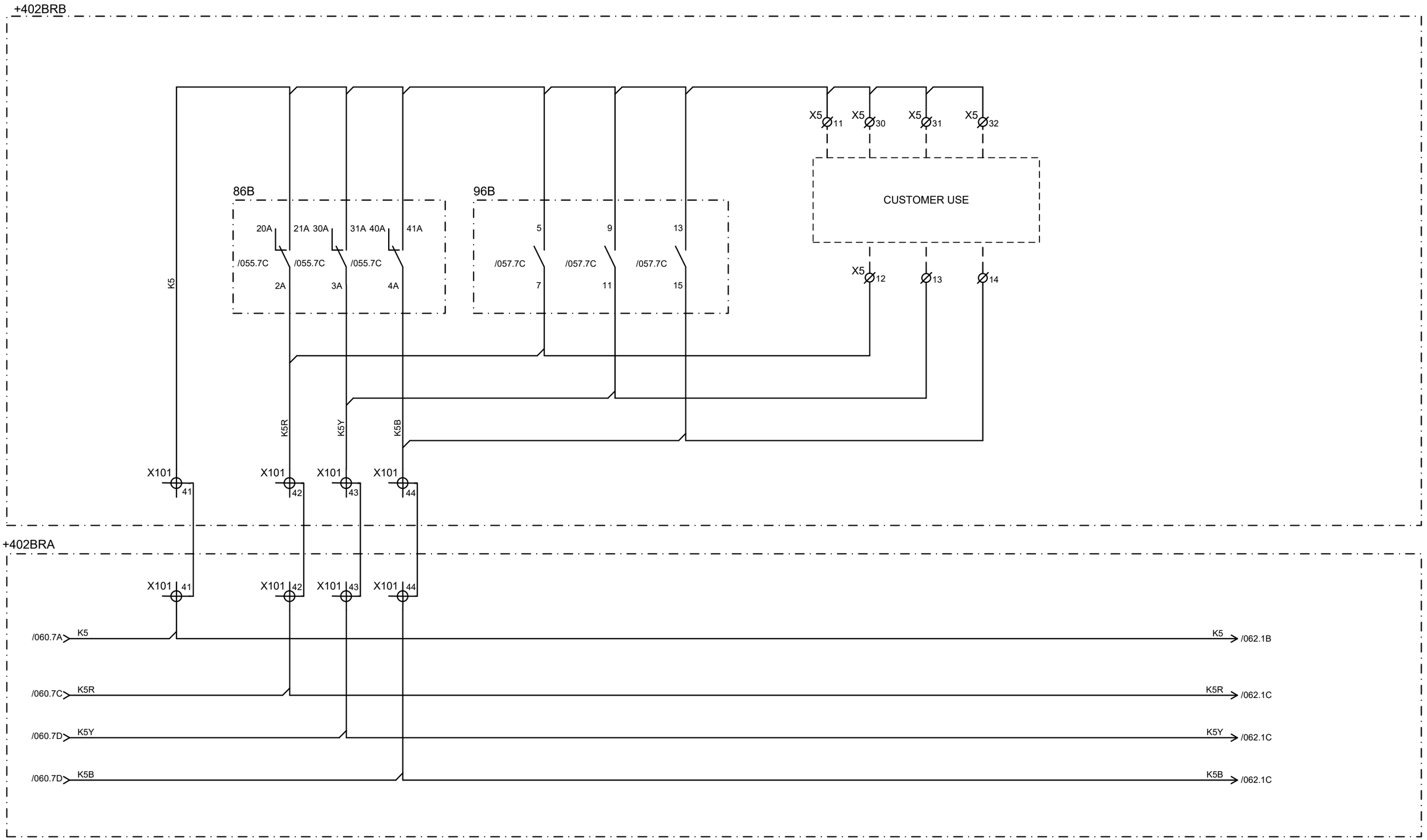

CUSTOMER : JALPURA KHURJA POWER TRANSMISSION LTD. (THE TATA POWER COMPANY LTD.) **PROJECT :** SUPPLY OF CRP & SAS AT 400/220kV METRO DEPOT GIS	**CONTRACTOR :** BAJEL PROJECTS LIMITED	Schneider Electric	**TITLE :** 400kV BUS REACTOR CONTROL & PROTN. PANEL (BAY-402) CB TC-1 CONTROL CKT.	PREPARED : BG REVIEWED : BG APPROVED : RKK	REVISION: Z DATE: 21-04-2025	SHT :061 CONT: 062
PO. No.& Date : 6100001138 DATED: 28.04.2024			**PANEL TYPE :** +402BRA,+402BRB	**DRG. NO.:** I1-226736082-S-02		

This document is the exclusive property of Schneider Electric and shall not be used, copied or communicated to third parties without prior authorization.

This document is the exclusive property of Schneider Electric and shall not be used, copied or communicated to third parties without prior authorization.

PRE- CLOSE SUPN | POST CLOSE SUPN / PROTN TRIP

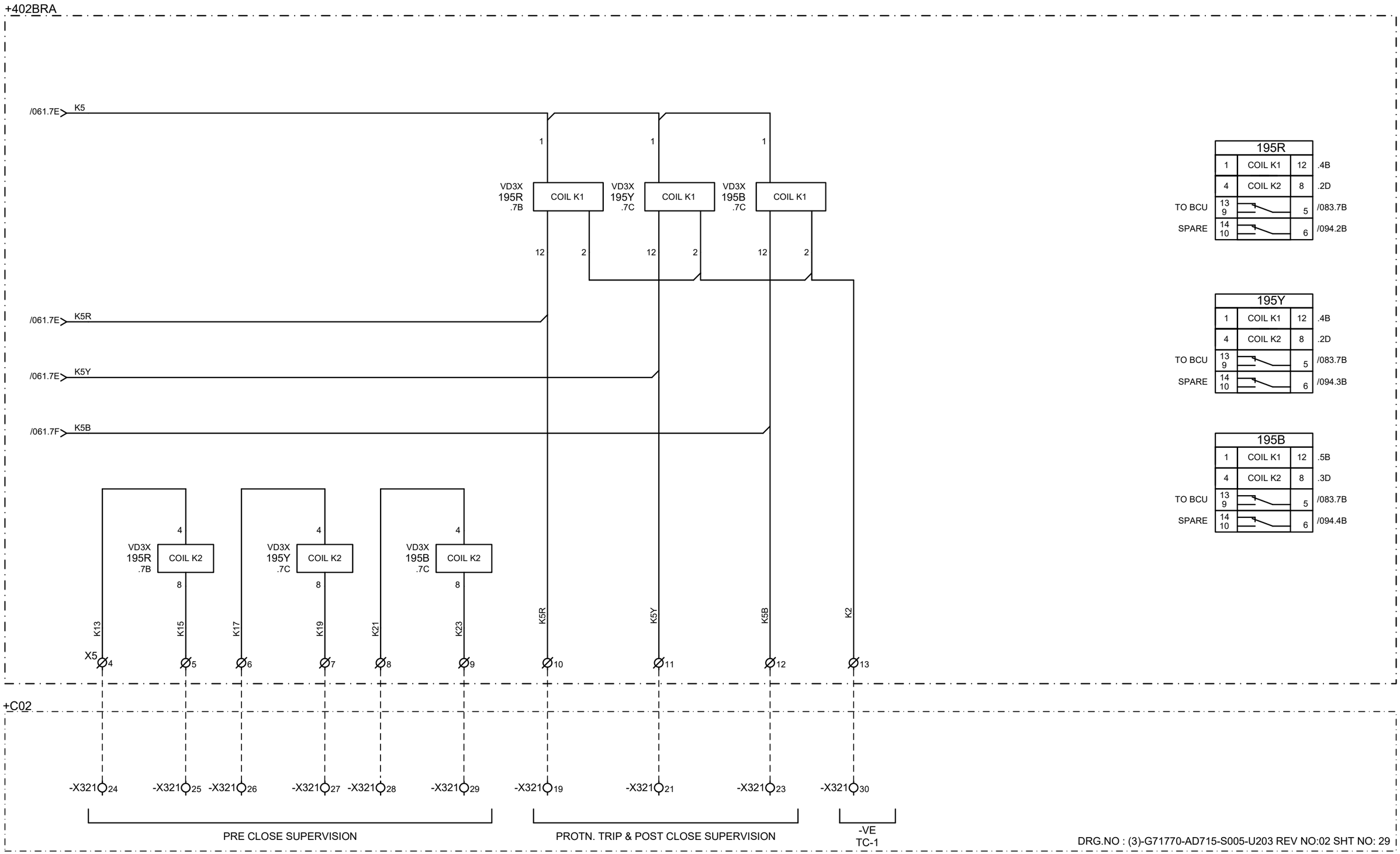

DRG.NO : (3)-G71770-AD715-S005-U203 REV NO:02 SHT NO: 29

CUSTOMER : JALPURA KHURJA POWER TRANSMISSION LTD. (THE TATA POWER COMPANY LTD.) PROJECT : SUPPLY OF CRP & SAS AT 400/220kV METRO DEPOT GIS	CONTRACTOR : BAJEL PROJECTS LIMITED	Schneider Electric	TITLE : 400kV BUS REACTOR CONTROL & PROTN. PANEL (BAY-402) CB TC-1 CONTROL CKT.	PREPARED : BG REVIEWED : BG APPROVED : RKK REVISION: Z DATE: 21-04-2025 SHT :062 CONT:063
PO. No.& Date : 6100001138 DATED: 28.04.2024			PANEL TYPE : +402BRA,+402BRB	DRG. NO.: I1-226736082-S-02

GROUP-A TRIP RELAY (86A) OPTD. | MAIN CB LBB OPTD, LBB RE-TRIP

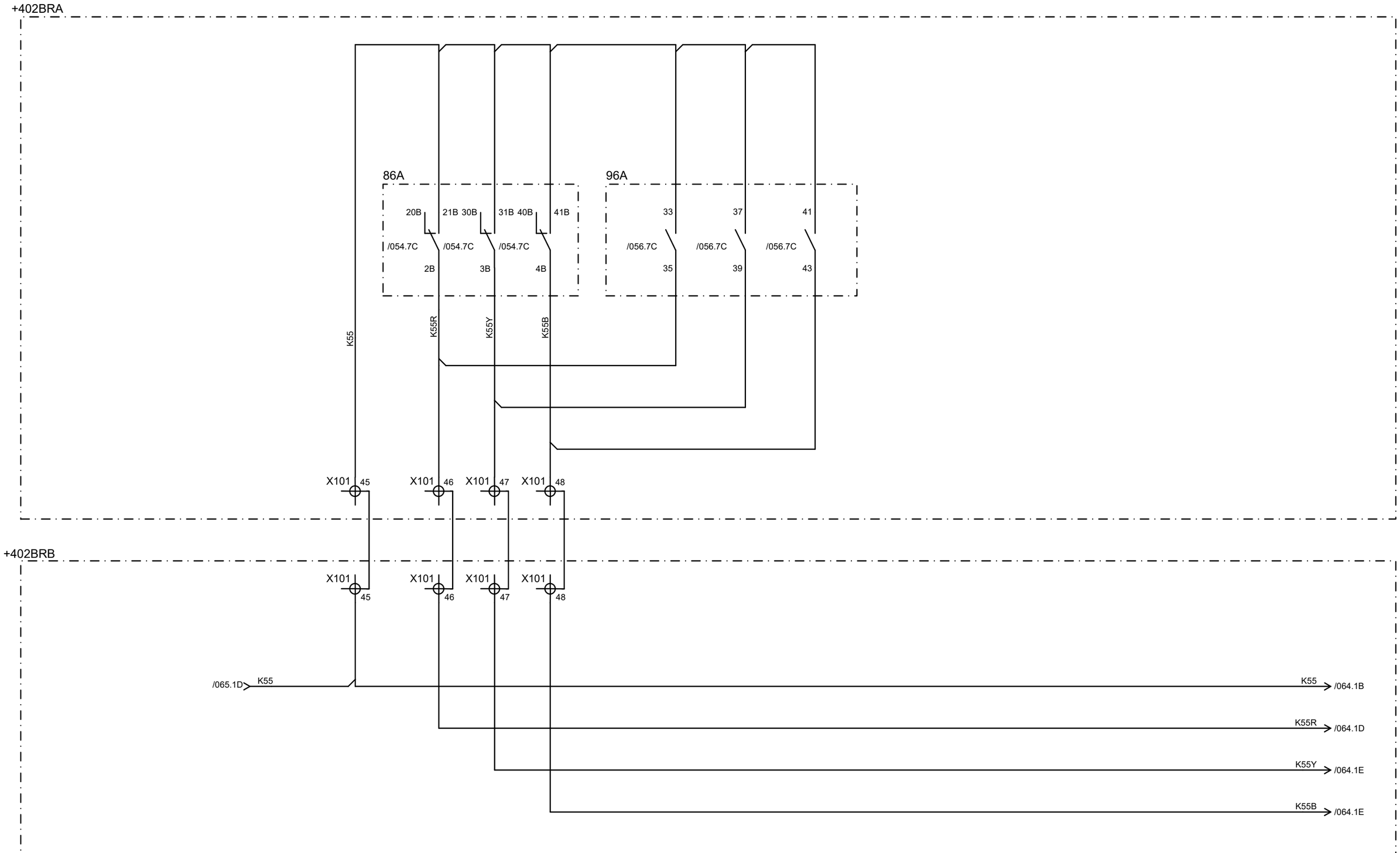

CUSTOMER : JALPURA KHURJA POWER TRANSMISSION LTD. (THE TATA POWER COMPANY LTD.) PROJECT : SUPPLY OF CRP & SAS AT 400/220kV METRO DEPOT GIS	CONTRACTOR : BAJEL PROJECTS LIMITED	TITLE : 400kV BUS REACTOR CONTROL & PROTN. PANEL (BAY-402) CB TC-2 CONTROL CKT.	PREPARED : BG REVIEWED : BG APPROVED : RKK
PO. No.& Date : 6100001138 DATED: 28.04.2024		PANEL TYPE : +402BRA,+402BRB	DRG. NO.: I1-226736082-S-02

REVISION: Z | DATE: 21-04-2025 | SHT : 063 | CONT: 064

This document is the exclusive property of Schneider Electric and shall not be used, copied or communicated to third parties without prior authorization.

GROUP-B TRIP RELAY (86B) OPTD.	MAIN CB LBB OPTD, LBB RE-TRIP	CUSTOMER USE

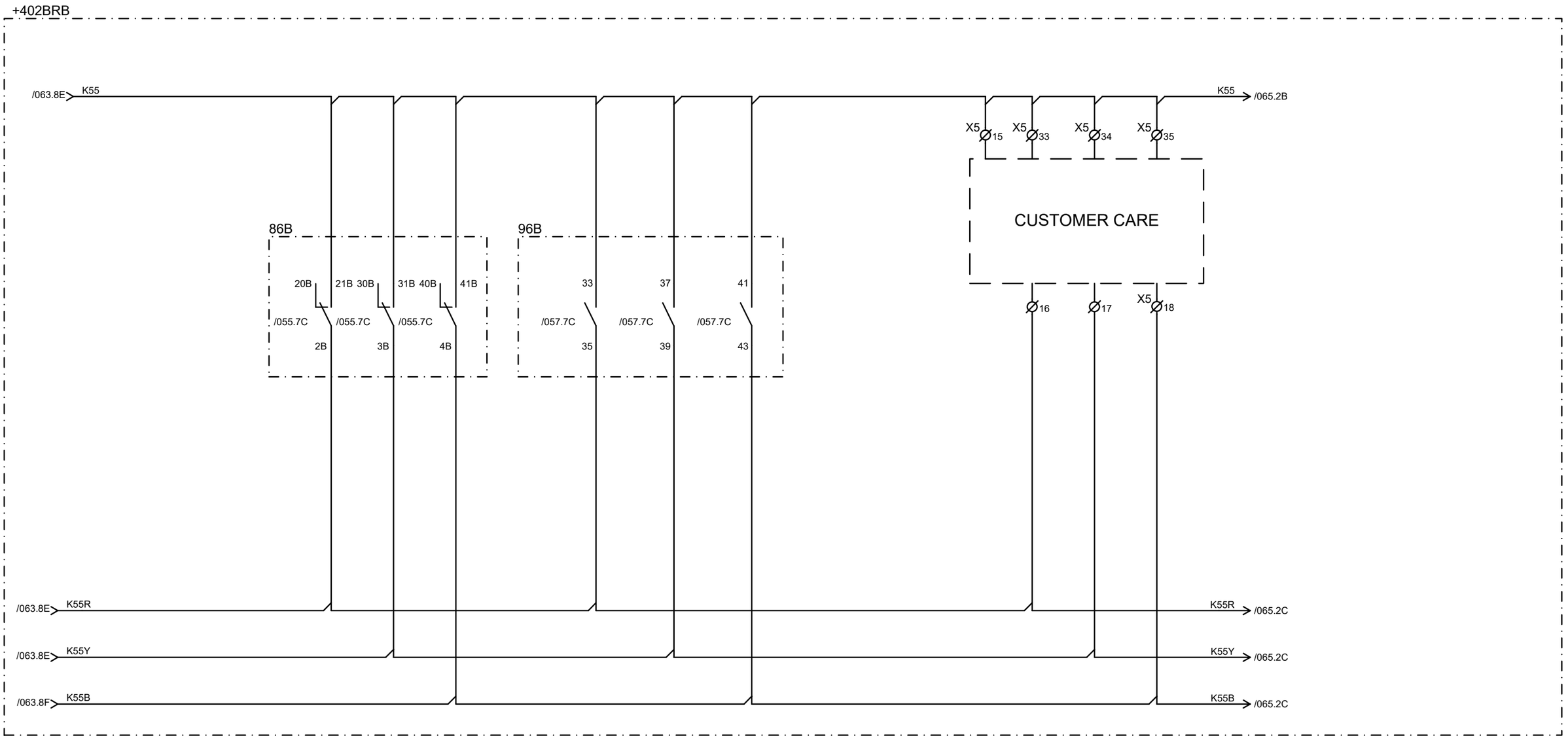

CUSTOMER : JALPURA KHURJA POWER TRANSMISSION LTD. (THE TATA POWER COMPANY LTD.) PROJECT : SUPPLY OF CRP & SAS AT 400/220kV METRO DEPOT GIS	CONTRACTOR : BAJEL PROJECTS LIMITED	TITLE : 400kV BUS REACTOR CONTROL & PROTN. PANEL (BAY-402) CB TC-1 CONTROL CKT.	PREPARED : BG REVIEWED : BG APPROVED : RKK
PO. No.& Date : 6100001138 DATED: 28.04.2024		PANEL TYPE : +402BRA,+402BRB	DRG. NO.: I1-226736082-S-02

REVISION: Z
DATE: 21-04-2025
SHT : 064
CONT: 065

This document is the exclusive property of Schneider Electric and shall not be used, copied or communicated to third parties without prior authorization.

This document is the exclusive property of Schneider Electric and shall not be used, copied or communicated to third parties without prior authorization.

PRE- CLOSE SUPN | POST CLOSE SUPN / PROTN TRIP

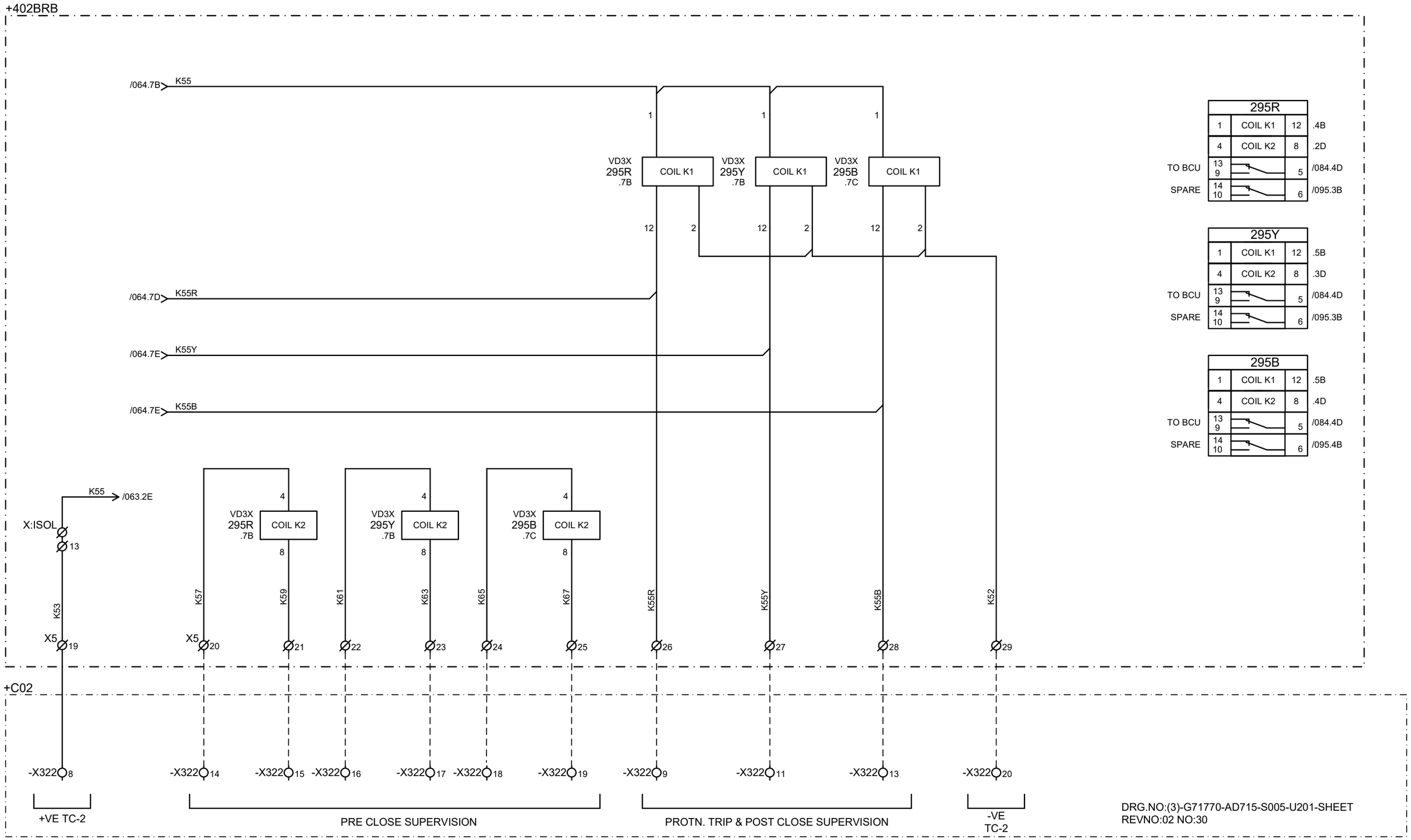

CUSTOMER : JALPURA KHURJA POWER TRANSMISSION LTD. (THE TATA POWER COMPANY LTD.) PROJECT : SUPPLY OF CRP & SAS AT 400/220kV METRO DEPOT GIS	CONTRACTOR : BAJEL PROJECTS LIMITED	TITLE : 400kV BUS REACTOR CONTROL & PROTN. PANEL (BAY-402) CB TC-2 CONTROL CKT.	PREPARED : BG REVIEWED : BG APPROVED : RKK REVISION: Z DATE: 21-04-2025 SHT : 065 CONT: 066
PO. No.& Date : 6100001138 DATED: 28.04.2024		PANEL TYPE : +402BRA,+402BRB	DRG. NO.: I1-226736082-S-02

CIRCUIT BREAKER: 402-Q0

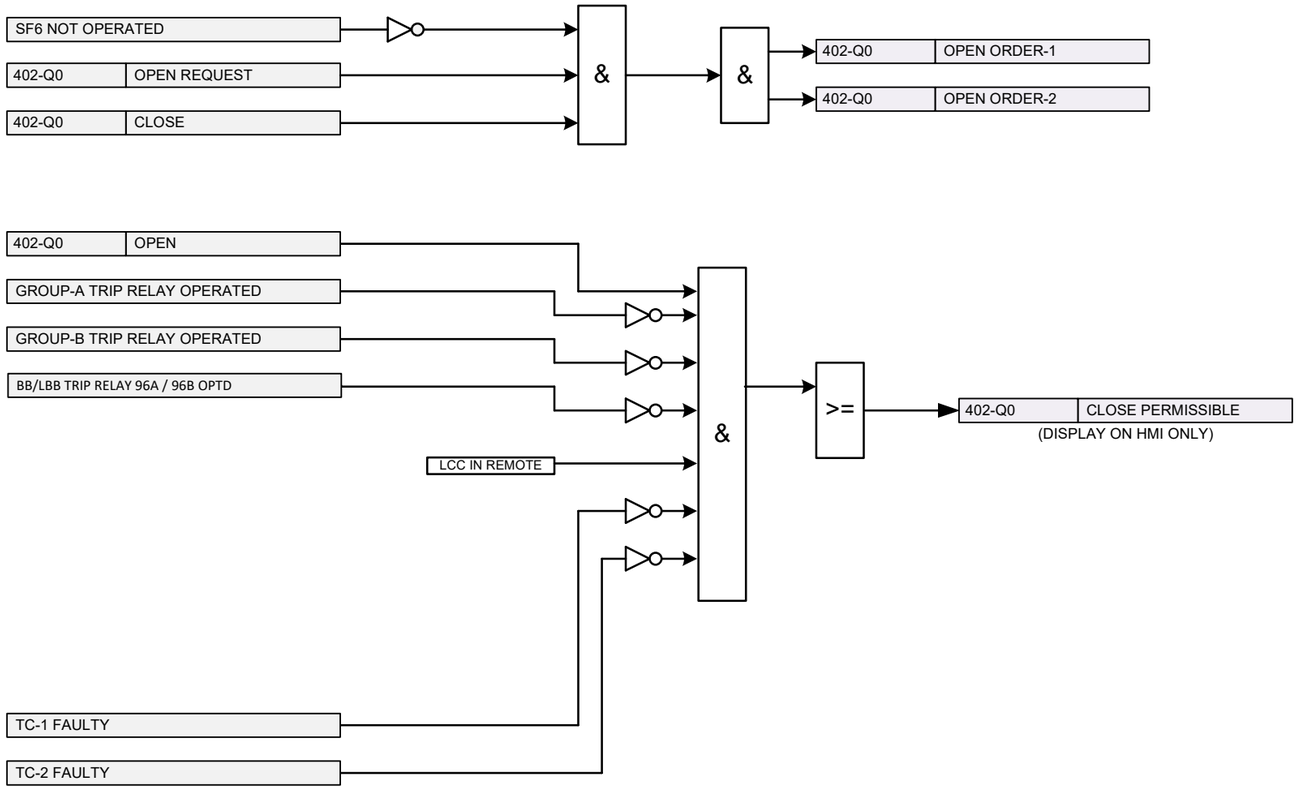

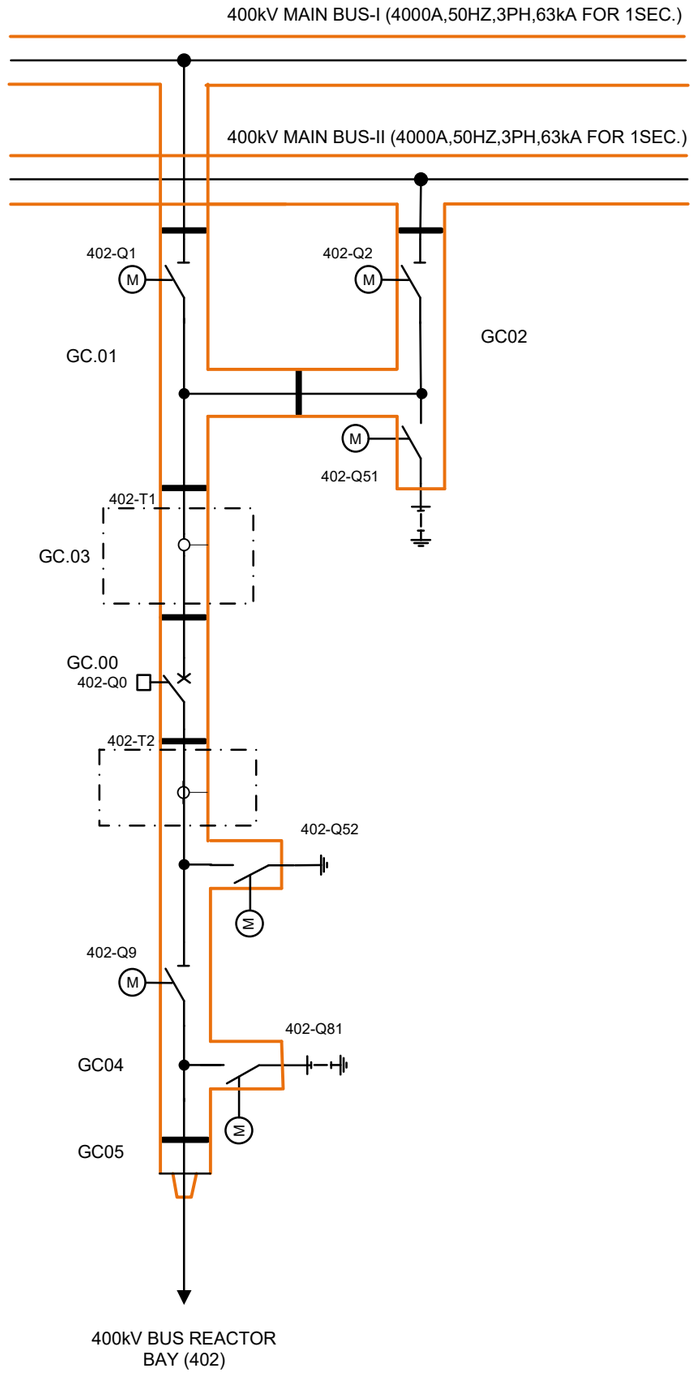

@ - SIGNALS TO BE TAKEN THROUGH GOOSE

CUSTOMER : JALPURA KHURJA POWER TRANSMISSION LTD. (THE TATA POWER COMPANY LTD.) PROJECT : SUPPLY OF CRP & SAS AT 400/220kV METRO DEPOT GIS	CONTRACTOR : BAJEL PROJECTS LIMITED	Schneider Electric	TITLE : 400kV BUS REACTOR CONTROL & PROTN. PANEL (BAY-402) BCU LOGIC
PO. No.& Date : 6100001138 DATED: 28.04.2024			PANEL TYPE : +402BRA,+402BRB

PREPARED : BG	REVISION: Z	SHT :066
REVIEWED : BG	DATE: 21-04-2025	CONT: 067
APPROVED : RKK		
DRG. NO.: I1-226736082-S-02		

This document is the exclusive property of Schneider Electric and shall not be used, copied or communicated to third parties without prior authorization.

ISOLATOR INTERLOCK: 402-Q1

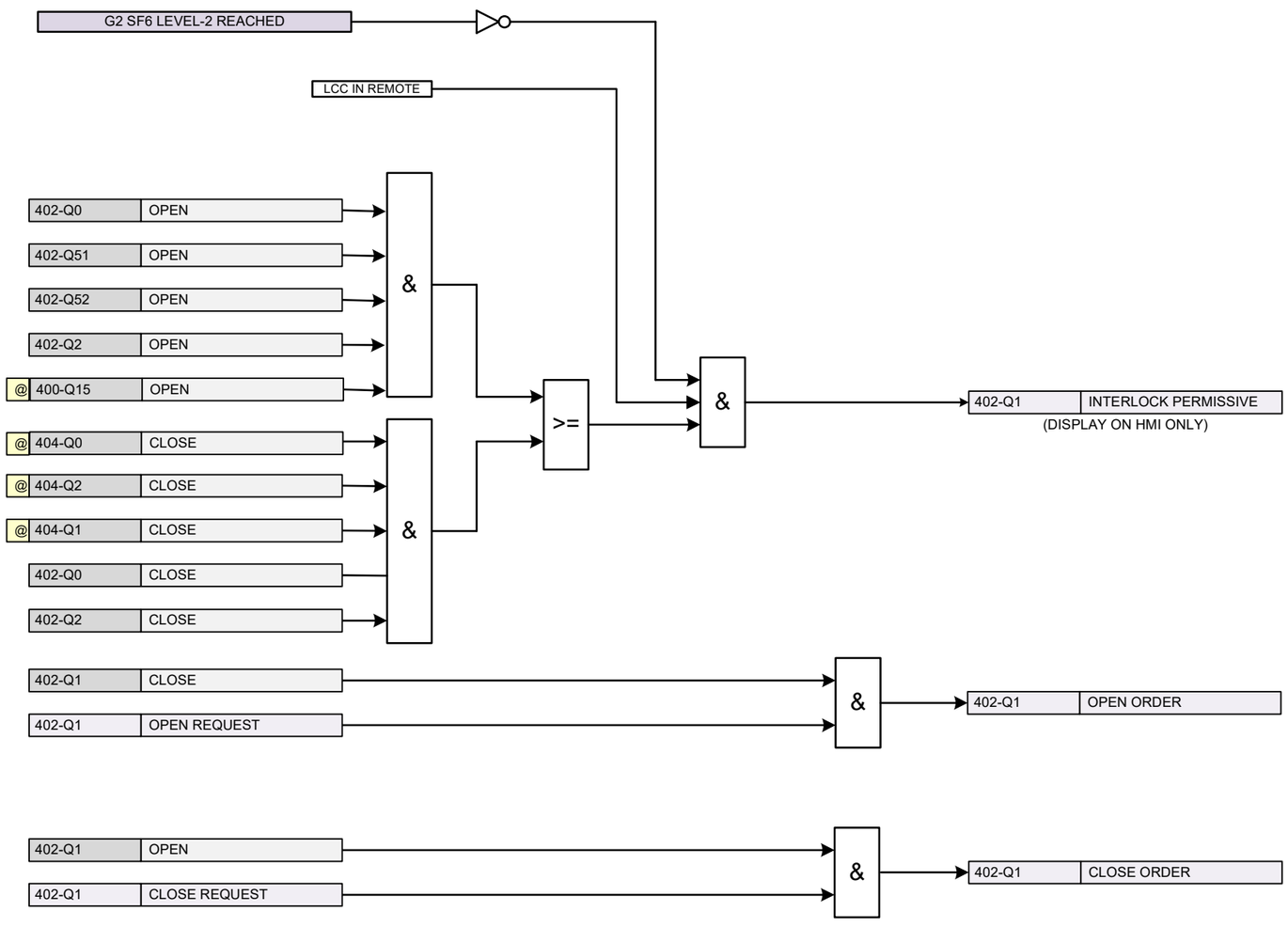

@ - SIGNALS TO BE TAKEN THROUGH GOOSE

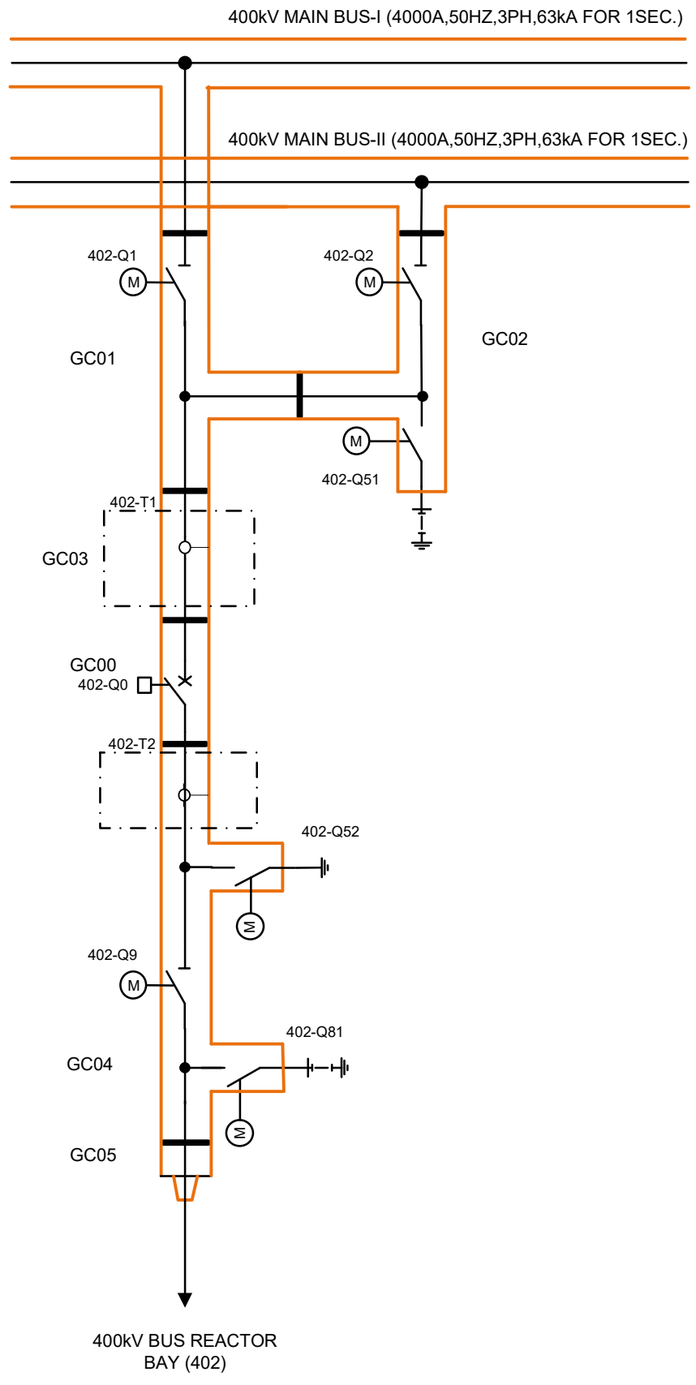

CUSTOMER : JALPURA KHURJA POWER TRANSMISSION LTD. (THE TATA POWER COMPANY LTD.) PROJECT : SUPPLY OF CRP & SAS AT 400/220kV METRO DEPOT GIS	CONTRACTOR : BAJEL PROJECTS LIMITED	Schneider Electric	TITLE : 400kV BUS REACTOR CONTROL & PROTN. PANEL (BAY-402) BCU LOGIC	PREPARED : BG REVIEWED : BG APPROVED : RKK	REVISION: Z DATE: 21-04-2025	SHT :067 CONT: 068
PO. No.& Date : 6100001138 DATED: 28.04.2024			PANEL TYPE : +402BRA,+402BRB	DRG. NO.: I1-226736082-S-02		

This document is the exclusive property of Schneider Electric and shall not be used, copied or communicated to third parties without prior authorization.

ISOLATOR INTERLOCK: 402-Q2

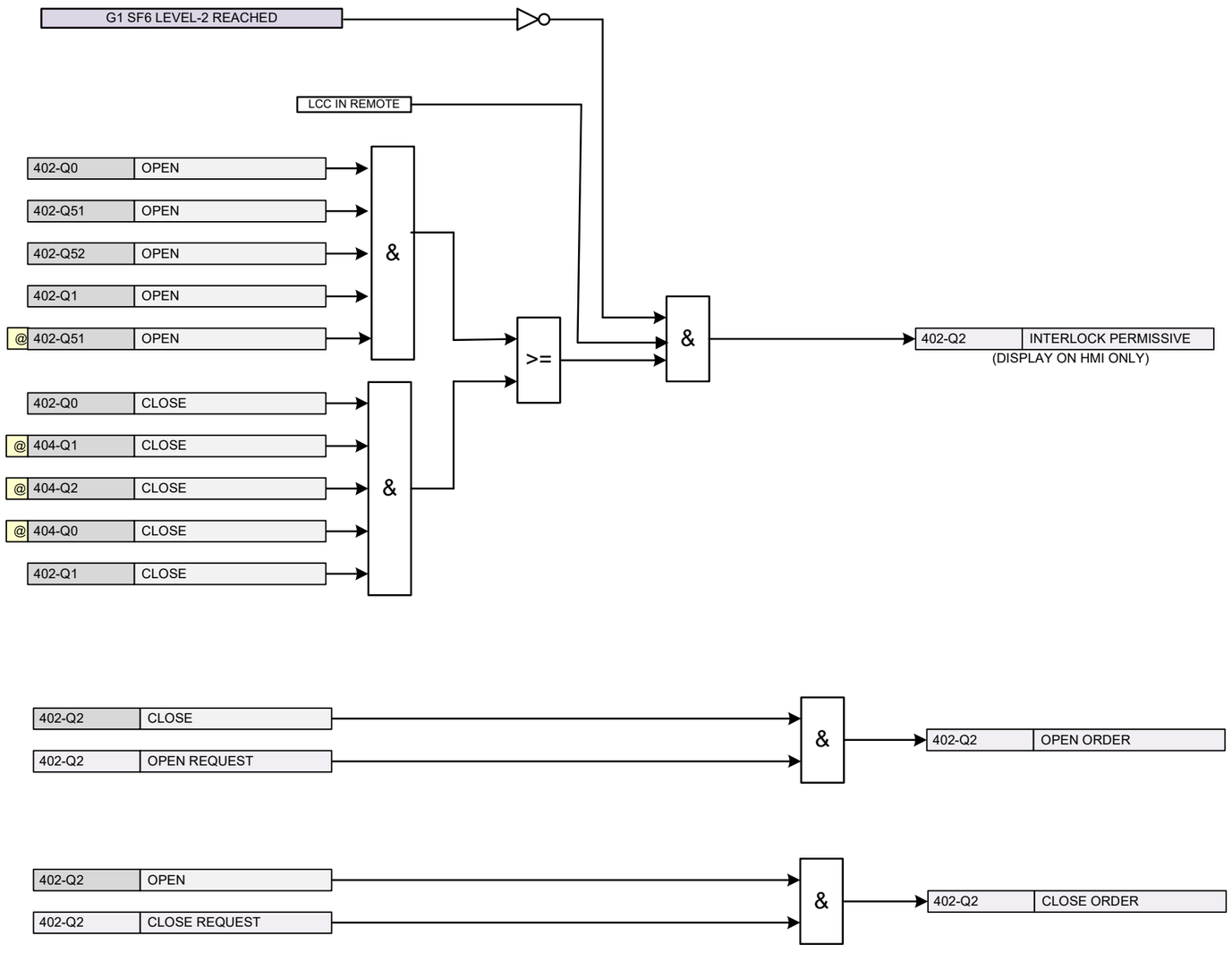

@ - SIGNALS TO BE TAKEN THROUGH GOOSE

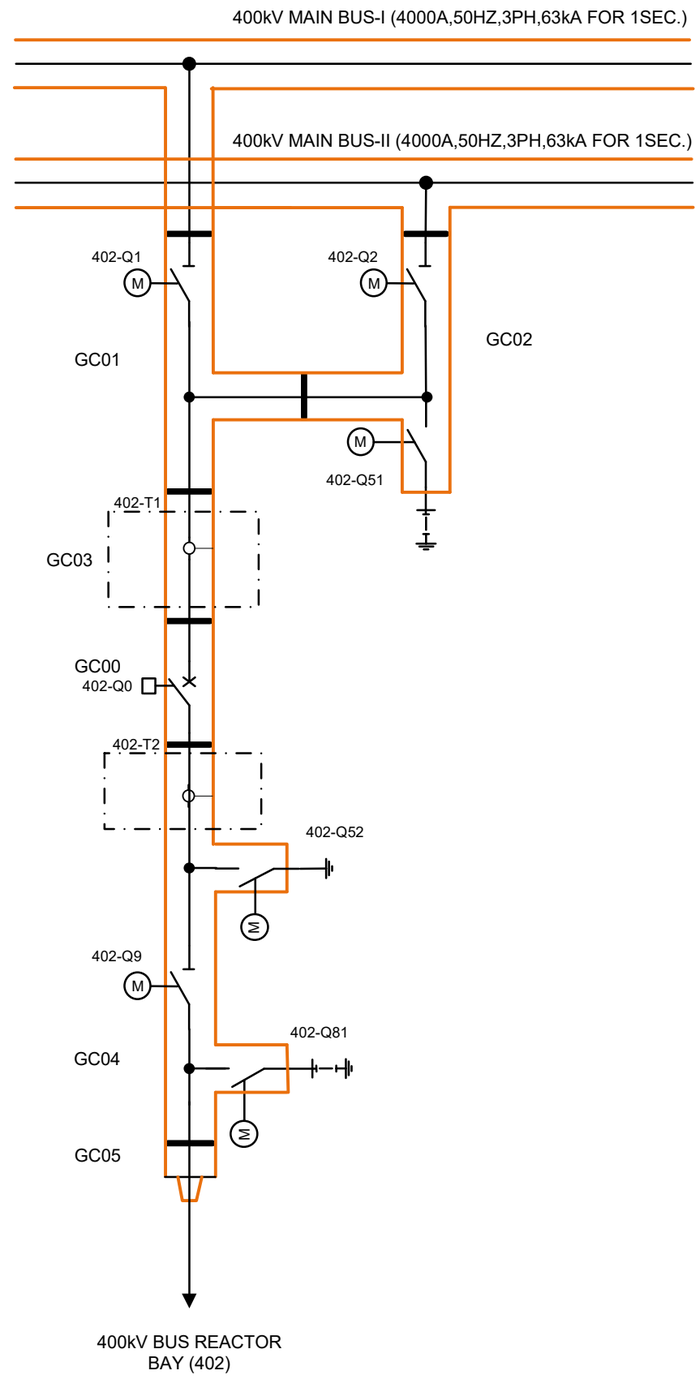

CUSTOMER : JALPURA KHURJA POWER TRANSMISSION LTD. (THE TATA POWER COMPANY LTD.) PROJECT : SUPPLY OF CRP & SAS AT 400/220kV METRO DEPOT GIS	CONTRACTOR : BAJEL PROJECTS LIMITED	TITLE : 400kV BUS REACTOR CONTROL & PROTN. PANEL (BAY-402) BCU LOGIC	PREPARED : BG REVIEWED : BG APPROVED : RKK REVISION: Z DATE: 21-04-2025 SHT : 068 CONT: 069
PO. No.& Date : 6100001138 DATED: 28.04.2024		PANEL TYPE : +402BRA,+402BRB	DRG. NO.: I1-226736082-S-02

This document is the exclusive property of Schneider Electric and shall not be used, copied or communicated to third parties without prior authorization.

ISOLATOR INTERLOCK: 402-Q9

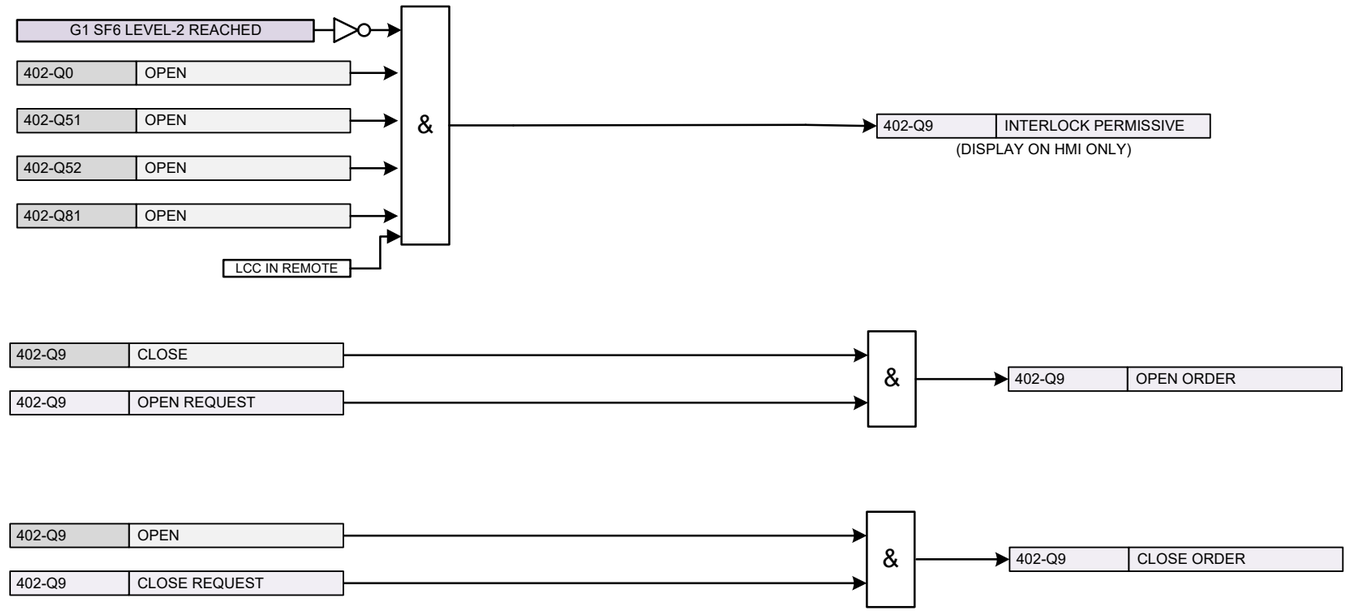

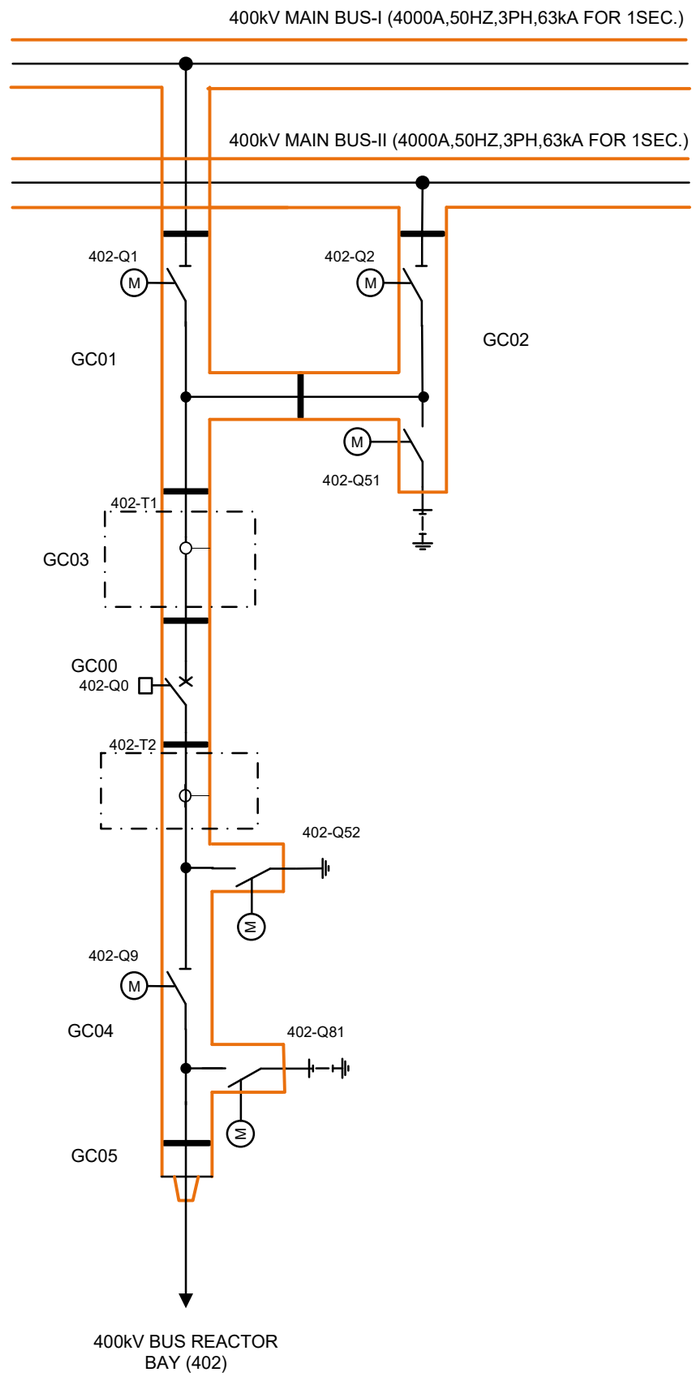

This document is the exclusive property of Schneider Electric and shall not be used, copied or communicated to third parties without prior authorization.

CUSTOMER : JALPURA KHURJA POWER TRANSMISSION LTD. (THE TATA POWER COMPANY LTD.) PROJECT : SUPPLY OF CRP & SAS AT 400/220kV METRO DEPOT GIS	CONTRACTOR : BAJEL PROJECTS LIMITED	TITLE : 400kV BUS REACTOR CONTROL & PROTN. PANEL (BAY-402) BCU LOGIC	PREPARED : BG REVIEWED : BG APPROVED : RKK
PO. No.& Date : 6100001138 DATED: 28.04.2024		PANEL TYPE : +402BRA,+402BRB	DRG. NO.: I1-226736082-S-02

REVISION: Z | DATE: 21-04-2025 | SHT : 069 | CONT: 070

EARTH SWITCH INTERLOCK: 402-Q52

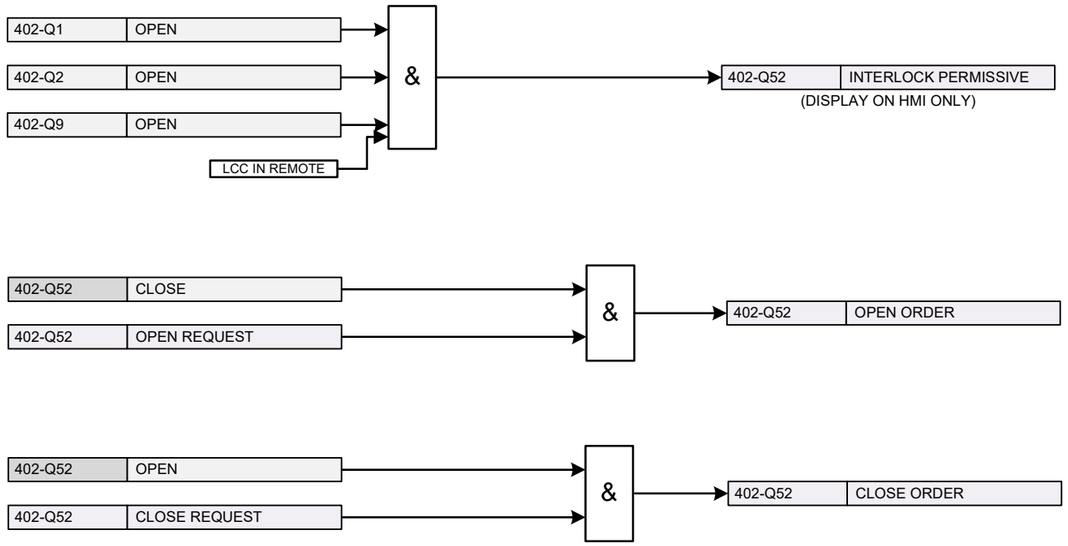

EARTH SWITCH INTERLOCK: 402-Q81

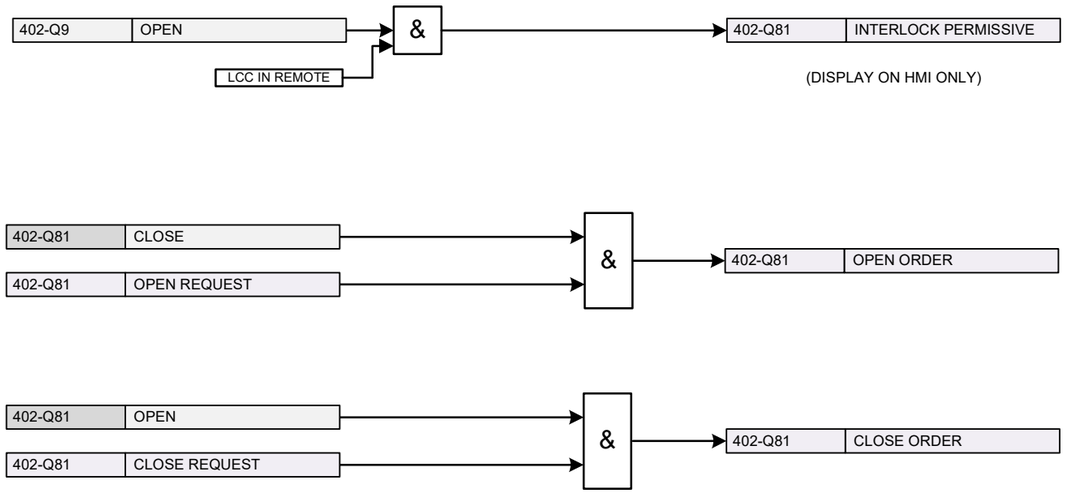

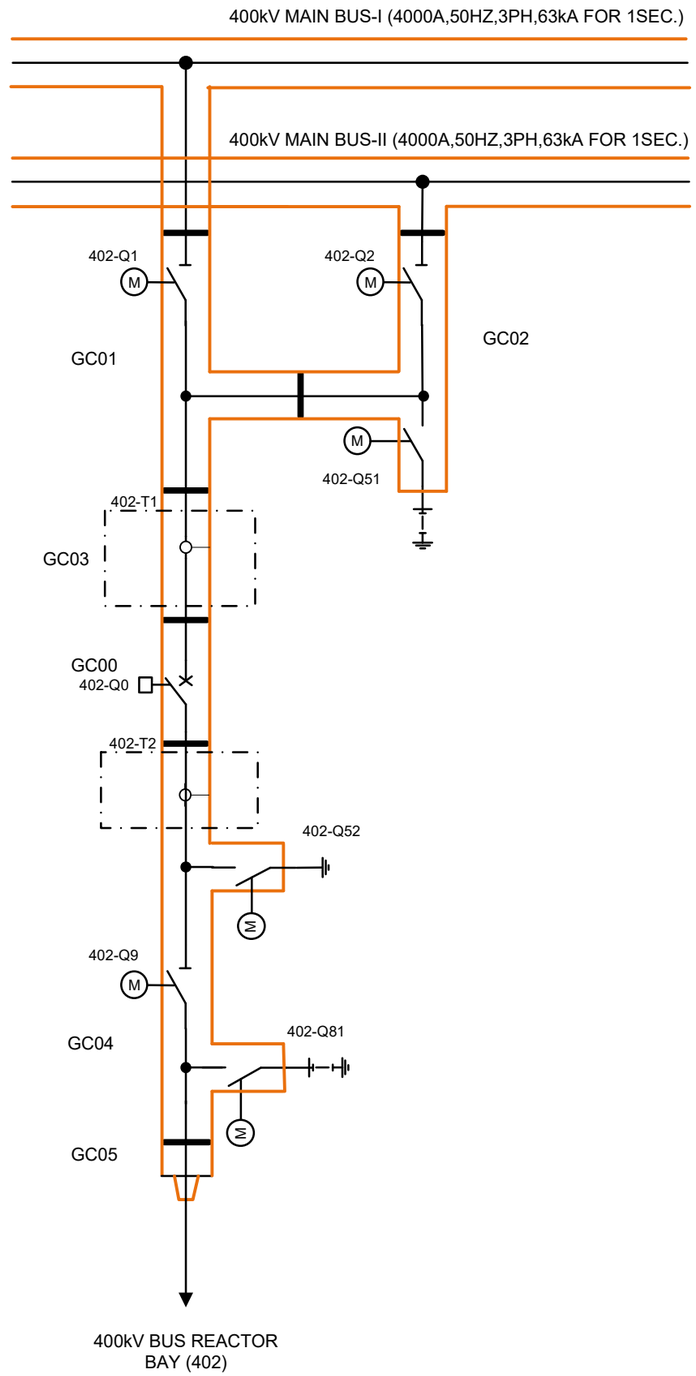

This document is the exclusive property of Schneider Electric and shall not be used, copied or communicated to third parties without prior authorization.

CUSTOMER : JALPURA KHURJA POWER TRANSMISSION LTD. (THE TATA POWER COMPANY LTD.) PROJECT : SUPPLY OF CRP & SAS AT 400/220kV METRO DEPOT GIS	CONTRACTOR : BAJEL PROJECTS LIMITED	TITLE : 400kV BUS REACTOR CONTROL & PROTN. PANEL (BAY-402) BCU LOGIC	PREPARED : BG REVISION: Z SHT :070
PO. No.& Date : 6100001138 DATED: 28.04.2024			REVIEWED : BG DATE: 21-04-2025 CONT:071
		PANEL TYPE : +402BRA,+402BRB	APPROVED : RKK DRG. NO.: I1-226736082-S-02

BUS VOLTAGE SELECTION LOGIC

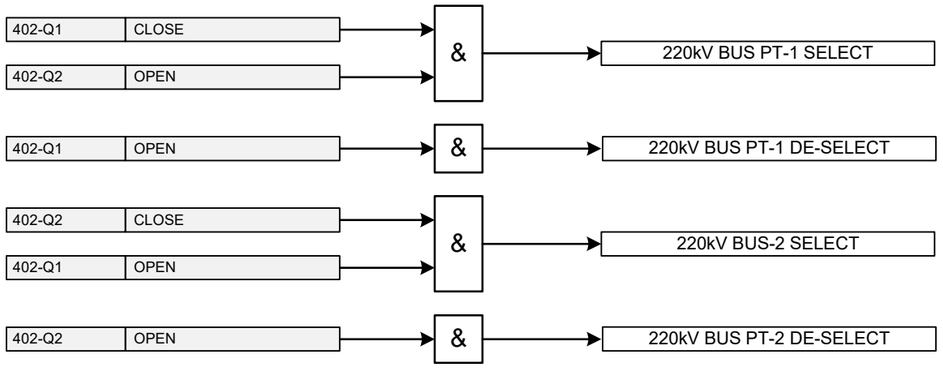

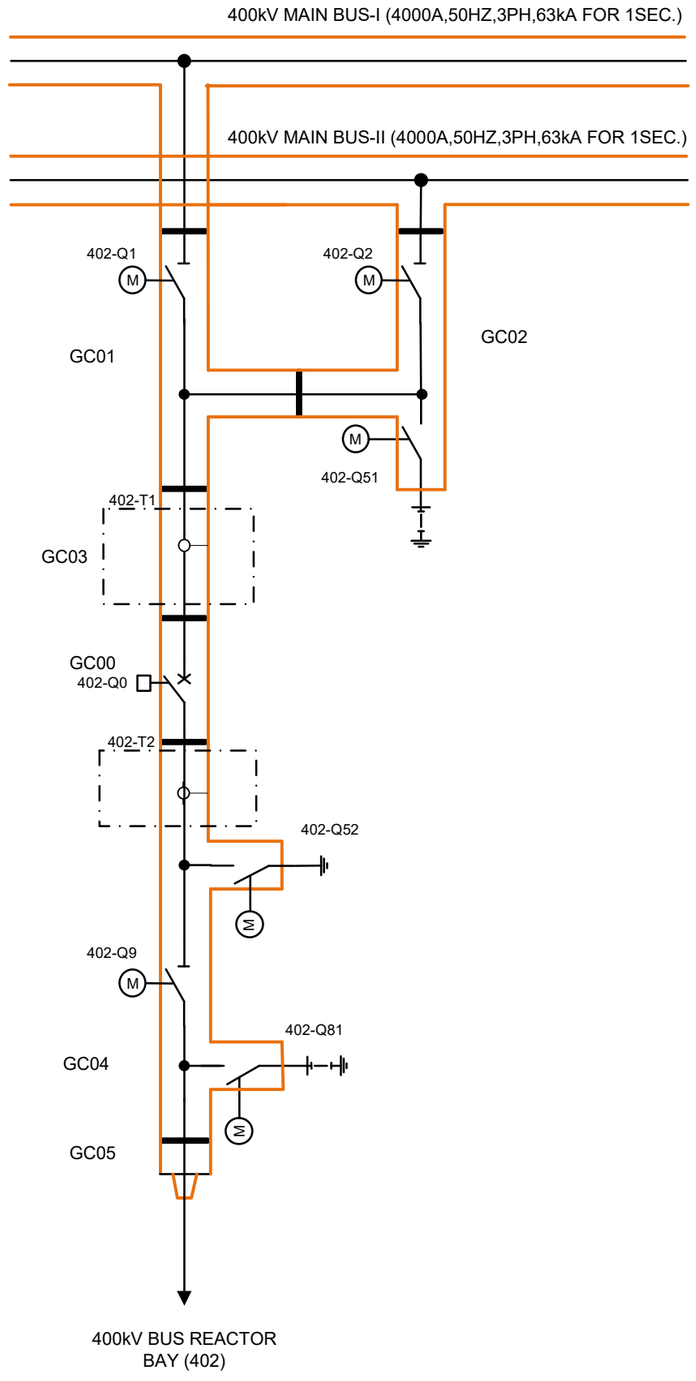

@ SIGNALS TO BE TAKEN THROUGH GOOSE

CUSTOMER : JALPURA KHURJA POWER TRANSMISSION LTD. (THE TATA POWER COMPANY LTD.) PROJECT : SUPPLY OF CRP & SAS AT 400/220kV METRO DEPOT GIS	CONTRACTOR : BAJEL PROJECTS LIMITED	Schneider Electric	TITLE : 400kV BUS REACTOR CONTROL & PROTN. PANEL (BAY-402) BCU LOGIC	PREPARED : BG REVIEWED : BG APPROVED : RKK	REVISION: Z DATE: 21-04-2025	SHT :071
PO. No.& Date : 6100001138 DATED: 28.04.2024			PANEL TYPE : +402BRA,+402BRB	DRG. NO.: I1-226736082-S-02		CONT: 072

This document is the exclusive property of Schneider Electric and shall not be used, copied or communicated to third parties without prior authorization.

+402BRB

BCU

Q	P	O	N	M	L	K	J	I	H	G	F	E	D	C	B	A
SLOT-Q TMU	SLOT-P DIGITAL INPUT CARD	SLOT-O DIGITAL INPUT CARD	SLOT-N DIGITAL INPUT CARD	SLOT-M DIGITAL INPUT CARD	SLOT-L DIGITAL INPUT CARD	SLOT-K DIGITAL INPUT CARD	SLOT-J SPARE	SLOT-I DIGITAL OUTPUT CARD	SLOT-H DIGITAL OUTPUT CARD	SLOT-G DIGITAL OUTPUT CARD	SLOT-F DIGITAL OUTPUT CARD	SLOT-E DIGITAL OUTPUT CARD	SLOT-D ANALOG INPUT CARD	SLOT-C SWITCH CARD	SLOT-B CPU BOARD	SLOT-A POWER SUPPLY UNIT
TMU220	DIU211	DIU211	DIU211	DIU211	DIU211	DIU211		DOU201	DOU201	DOU201	DOU201	DOU201	AIU211	REU202	CPU275	BIU241
/074.6A	/075.2E /076.2E	/077.2E /078.2E	/079.2E /080.2E	/081.2E /082.2E	/083.2E /084.2E	/085.2E /086.2E		/091.1A	/090.1A	/089.1A	/088.1A	/087.1A	/092.2E			/073.2E

This document is the exclusive property of Schneider Electric and shall not be used, copied or communicated to third parties without prior authorization.

CUSTOMER : JALPURA KHURJA POWER TRANSMISSION LTD. (THE TATA POWER COMPANY LTD.)	CONTRACTOR : BAJEL PROJECTS LIMITED	Schneider Electric	TITLE : 400kV BUS REACTOR CONTROL & PROTN. PANEL (BAY-402) BCU CARD DETAIL	PREPARED : BG / REVIEWED : BG / APPROVED : RKK	REVISION: Z / DATE: 21-04-2025	SHT :072 / CONT: 073
PROJECT : SUPPLY OF CRP & SAS AT 400/220kV METRO DEPOT GIS						
PO. No.& Date : 6100001138 DATED: 28.04.2024			PANEL TYPE : +402BRA,+402BRB	DRG. NO.: I1-226736082-S-02		

BCU FAULTY TO ADJ PANEL

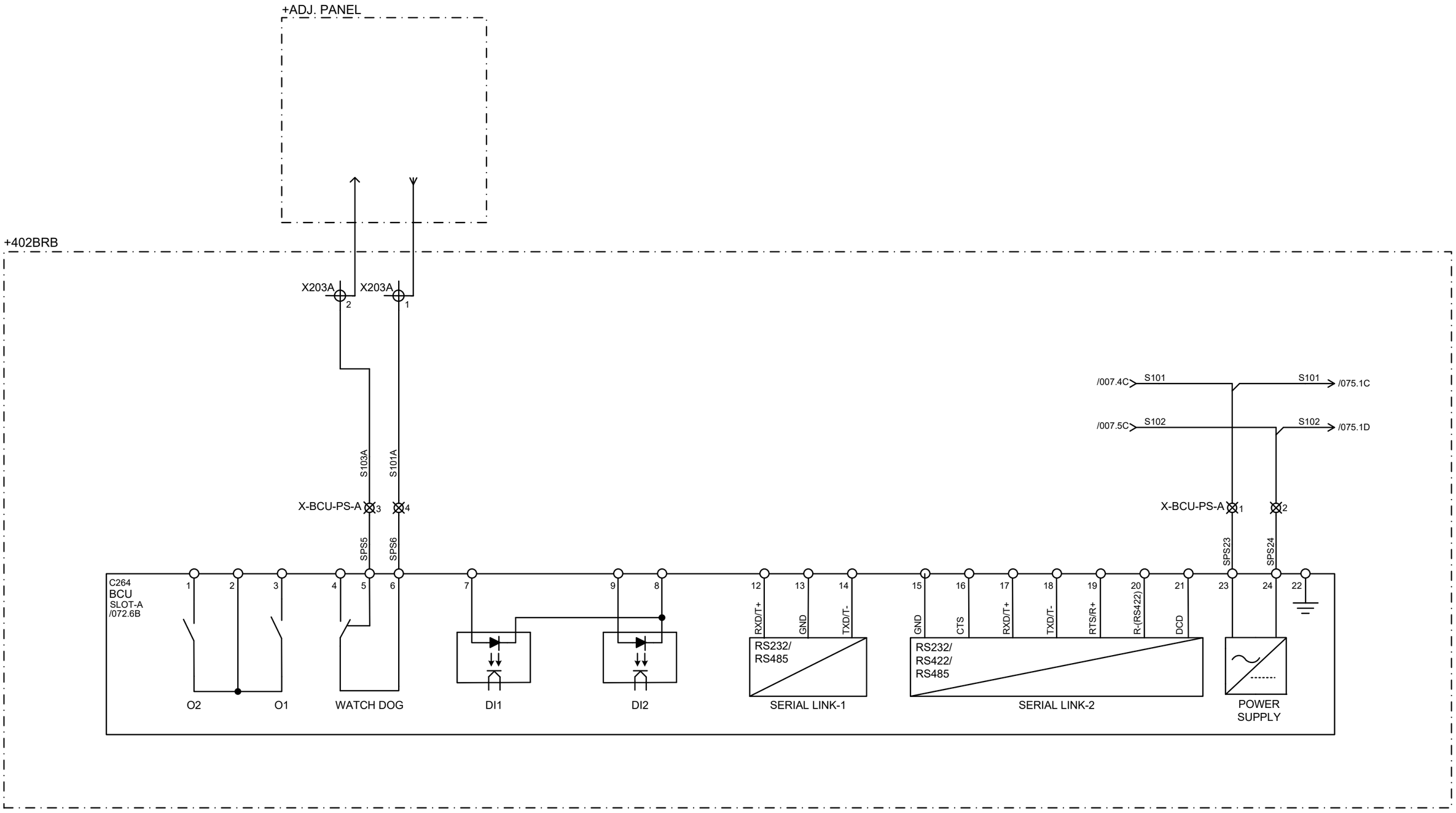

CUSTOMER : JALPURA KHURJA POWER TRANSMISSION LTD. (THE TATA POWER COMPANY LTD.) PROJECT : SUPPLY OF CRP & SAS AT 400/220kV METRO DEPOT GIS	CONTRACTOR : BAJEL PROJECTS LIMITED	Schneider Electric	TITLE : 400kV BUS REACTOR CONTROL & PROTN. PANEL (BAY-402) BCU AUX. SUPPLY CKT.	PREPARED : BG REVIEWED : BG APPROVED : RKK	REVISION: Z DATE: 21-04-2025	SHT : 073 CONT: 074
PO. No.& Date : 6100001138 DATED: 28.04.2024			PANEL TYPE : +402BRA,+402BRB	DRG. NO.: I1-226736082-S-02		

This document is the exclusive property of Schneider Electric and shall not be used, copied or communicated to third parties without prior authorization.

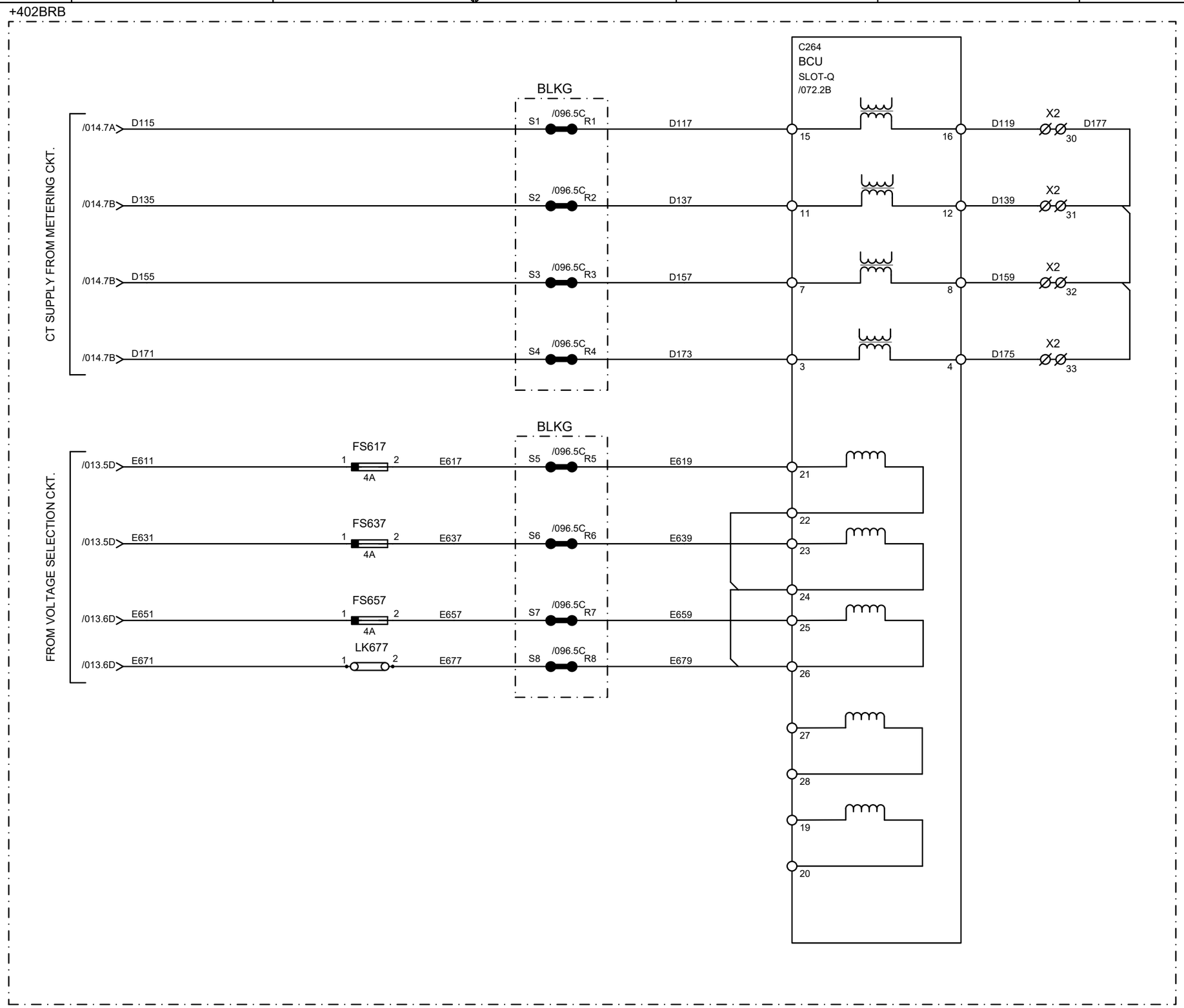

CUSTOMER : JALPURA KHURJA POWER TRANSMISSION LTD. (THE TATA POWER COMPANY LTD.) PROJECT : SUPPLY OF CRP & SAS AT 400/220kV METRO DEPOT GIS	CONTRACTOR : BAJEL PROJECTS LIMITED	Schneider Electric	TITLE : 400kV BUS REACTOR CONTROL & PROTN. PANEL (BAY-402) BCU CT/PT CKT.	PREPARED : BG REVIEWED : BG APPROVED : RKK	REVISION: Z DATE: 21-04-2025	SHT :074 CONT: 075
PO. No.& Date : 6100001138 DATED: 28.04.2024			PANEL TYPE : +402BRA,+402BRB	DRG. NO.: I1-226736082-S-02		

This document is the exclusive property of Schneider Electric and shall not be used, copied or communicated to third parties without prior authorization.

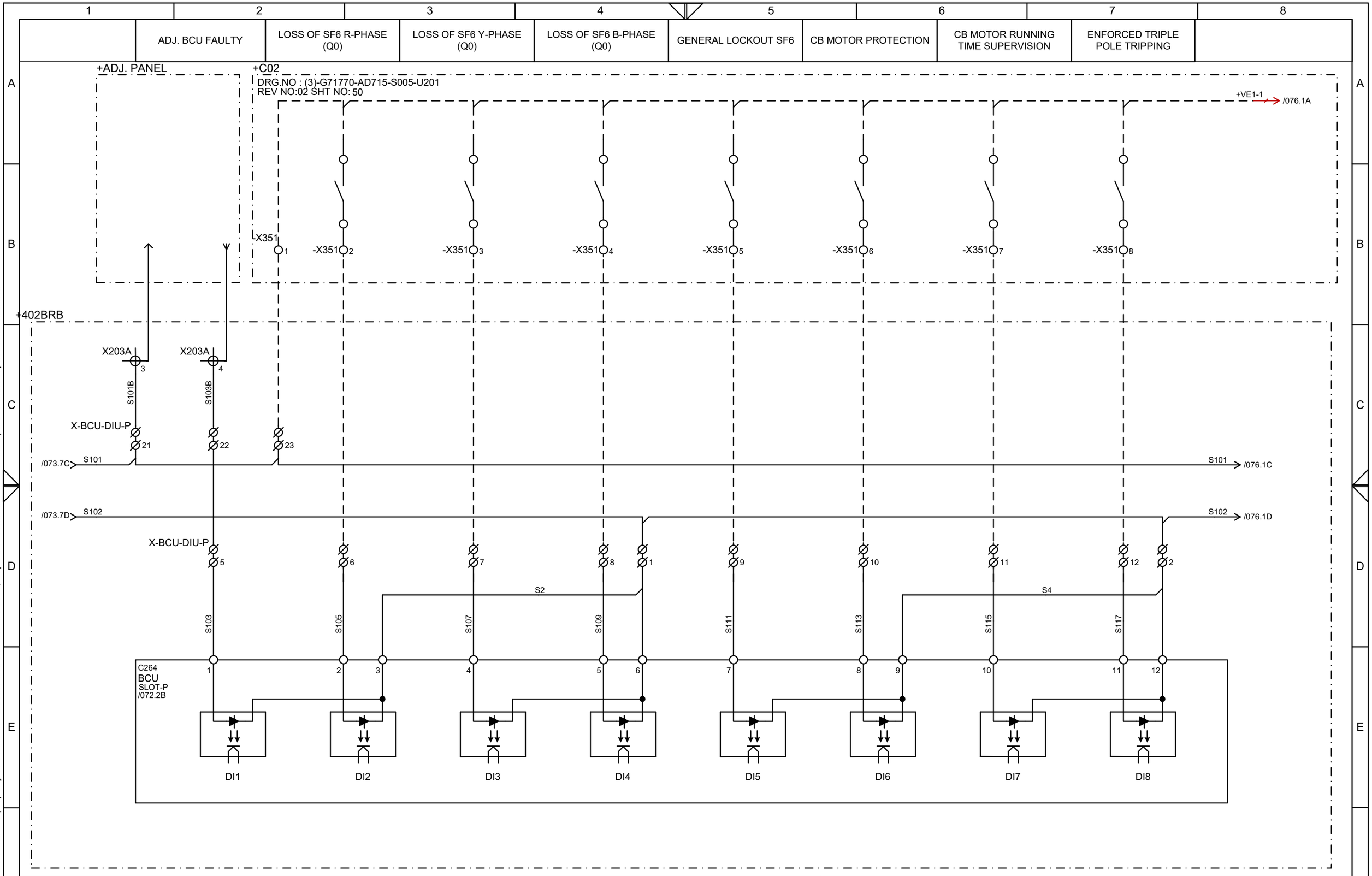

CUSTOMER : JALPURA KHURJA POWER TRANSMISSION LTD. (THE TATA POWER COMPANY LTD.) PROJECT : SUPPLY OF CRP & SAS AT 400/220kV METRO DEPOT GIS	CONTRACTOR : BAJEL PROJECTS LIMITED	TITLE : 400kV BUS REACTOR CONTROL & PROTN. PANEL (BAY-402) BCU DIGITAL INPUT CARD	PREPARED : BG REVIEWED : BG APPROVED : RKK REVISION: Z DATE: 21-04-2025 SHT :075 CONT: 076
PO. No.& Date : 6100001138 DATED: 28.04.2024		PANEL TYPE : +402BRA,+402BRB	DRG. NO.: I1-226736082-S-02

This document is the exclusive property of Schneider Electric and shall not be used, copied or communicated to third parties without prior authorization.

This document is the exclusive property of Schneider Electric and shall not be used, copied or communicated to third parties without prior authorization.

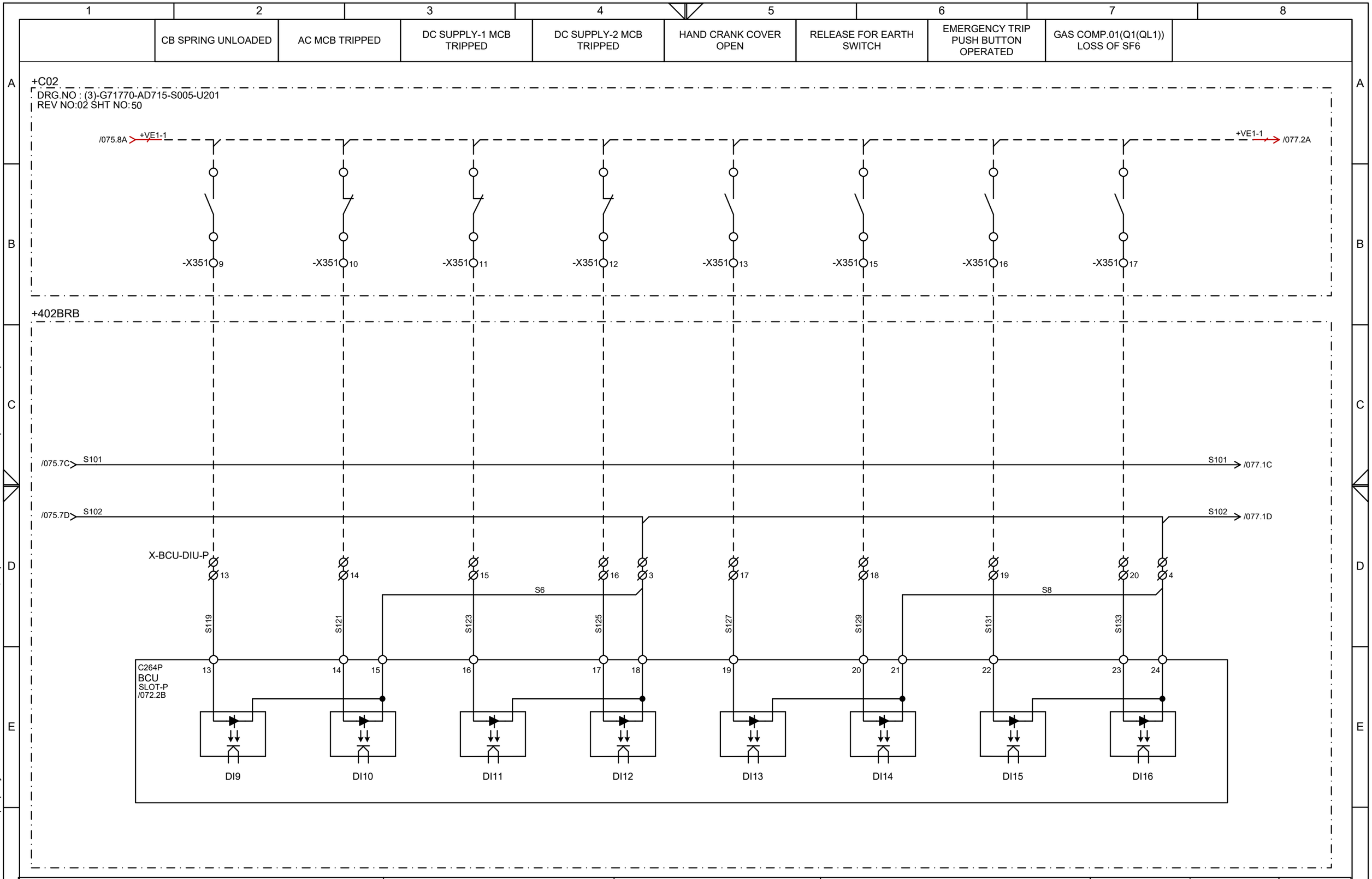

CUSTOMER : JALPURA KHURJA POWER TRANSMISSION LTD. (THE TATA POWER COMPANY LTD.) PROJECT : SUPPLY OF CRP & SAS AT 400/220kV METRO DEPOT GIS	CONTRACTOR : BAJEL PROJECTS LIMITED	TITLE : 400kV BUS REACTOR CONTROL & PROTN. PANEL (BAY-402) BCU DIGITAL INPUT CARD	PREPARED : BG REVIEWED : BG APPROVED : RKK REVISION: Z DATE: 21-04-2025 SHT :076 CONT:077
PO. No.& Date : 6100001138 DATED: 28.04.2024		PANEL TYPE : +402BRA,+402BRB	DRG. NO.: I1-226736082-S-02

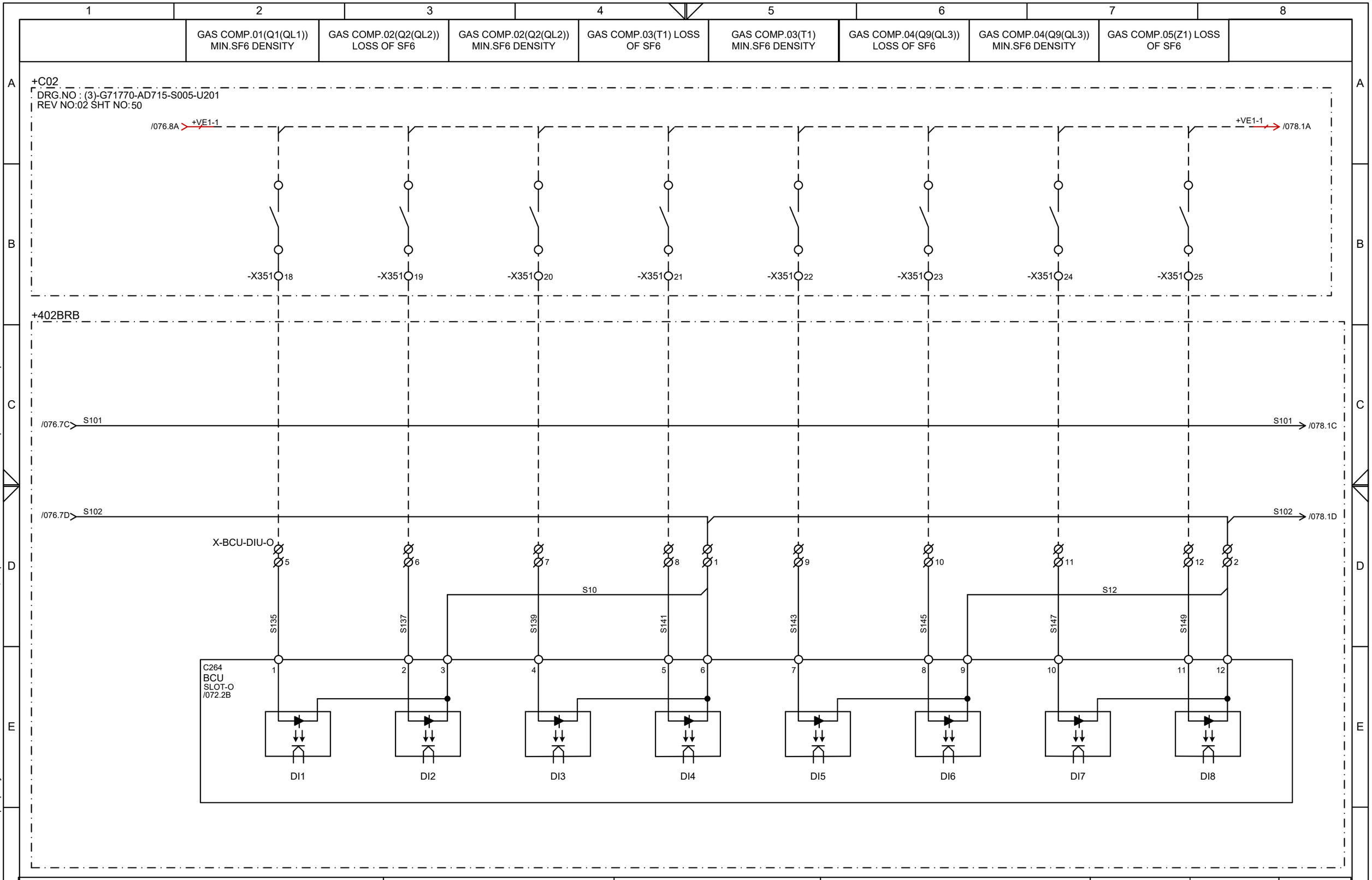

CUSTOMER : JALPURA KHURJA POWER TRANSMISSION LTD. (THE TATA POWER COMPANY LTD.) PROJECT : SUPPLY OF CRP & SAS AT 400/220kV METRO DEPOT GIS	CONTRACTOR : BAJEL PROJECTS LIMITED	TITLE : 400kV BUS REACTOR CONTROL & PROTN. PANEL (BAY-402) BCU DIGITAL INPUT CARD	PREPARED : BG REVIEWED : BG APPROVED : RKK REVISION: Z DATE: 21-04-2025 SHT :077 CONT:078
PO. No.& Date : 6100001138 DATED: 28.04.2024		PANEL TYPE : +402BRA,+402BRB	DRG. NO.: I1-226736082-S-02

This document is the exclusive property of Schneider Electric and shall not be used, copied or communicated to third parties without prior authorization.

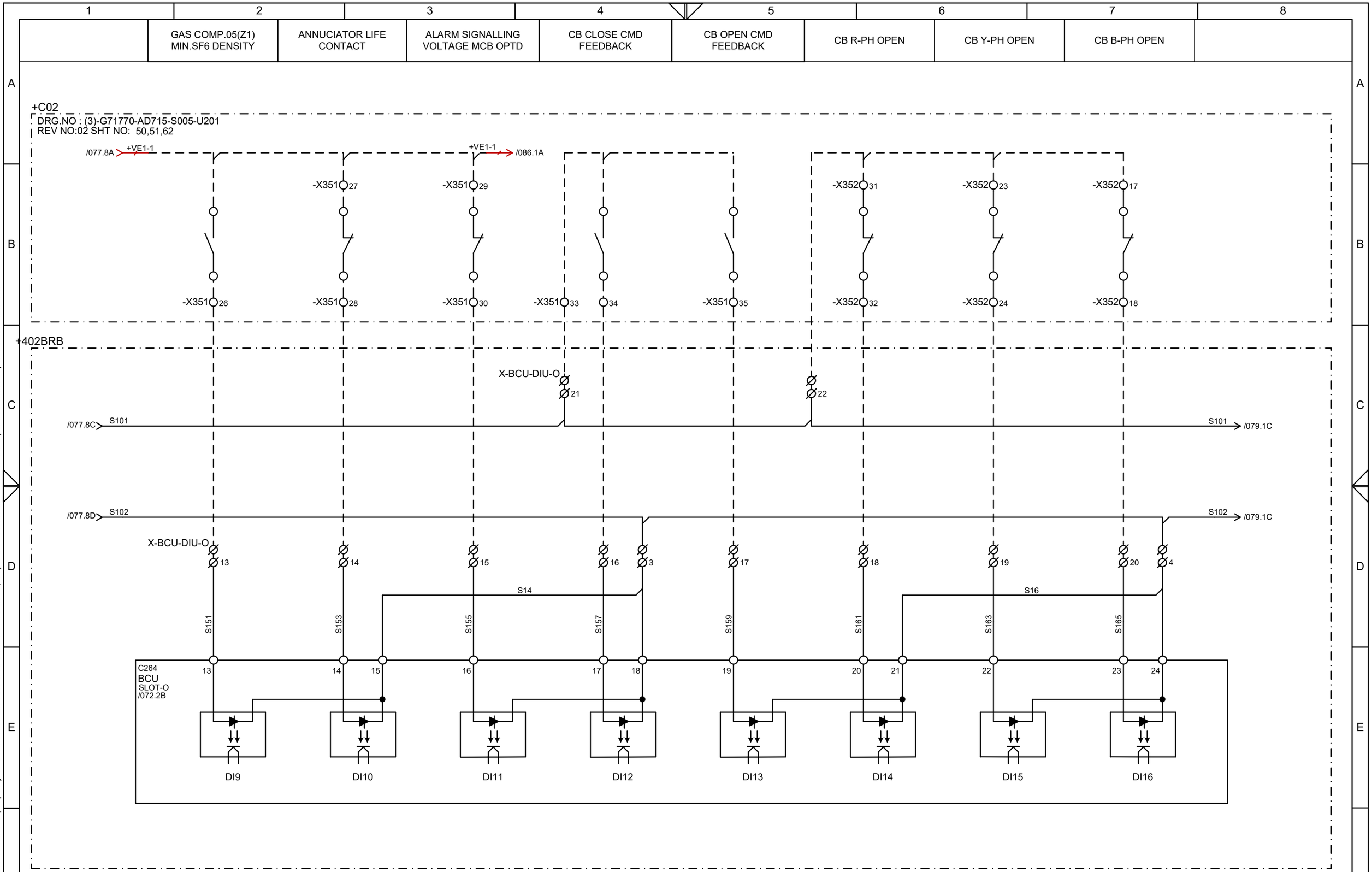

CUSTOMER : JALPURA KHURJA POWER TRANSMISSION LTD. (THE TATA POWER COMPANY LTD.) PROJECT : SUPPLY OF CRP & SAS AT 400/220kV METRO DEPOT GIS	CONTRACTOR : BAJEL PROJECTS LIMITED	TITLE : 400kV BUS REACTOR CONTROL & PROTN. PANEL (BAY-402) BCU DIGITAL INPUT CARD	PREPARED : BG REVISION: Z SHT :078
PO. No.& Date : 6100001138 DATED: 28.04.2024		PANEL TYPE : +402BRA,+402BRB	REVIEWED : BG DATE: 21-04-2025 CONT:079
			APPROVED : RKK DRG. NO.: I1-226736082-S-02

Schneider Electric

This document is the exclusive property of Schneider Electric and shall not be used, copied or communicated to third parties without prior authorization.

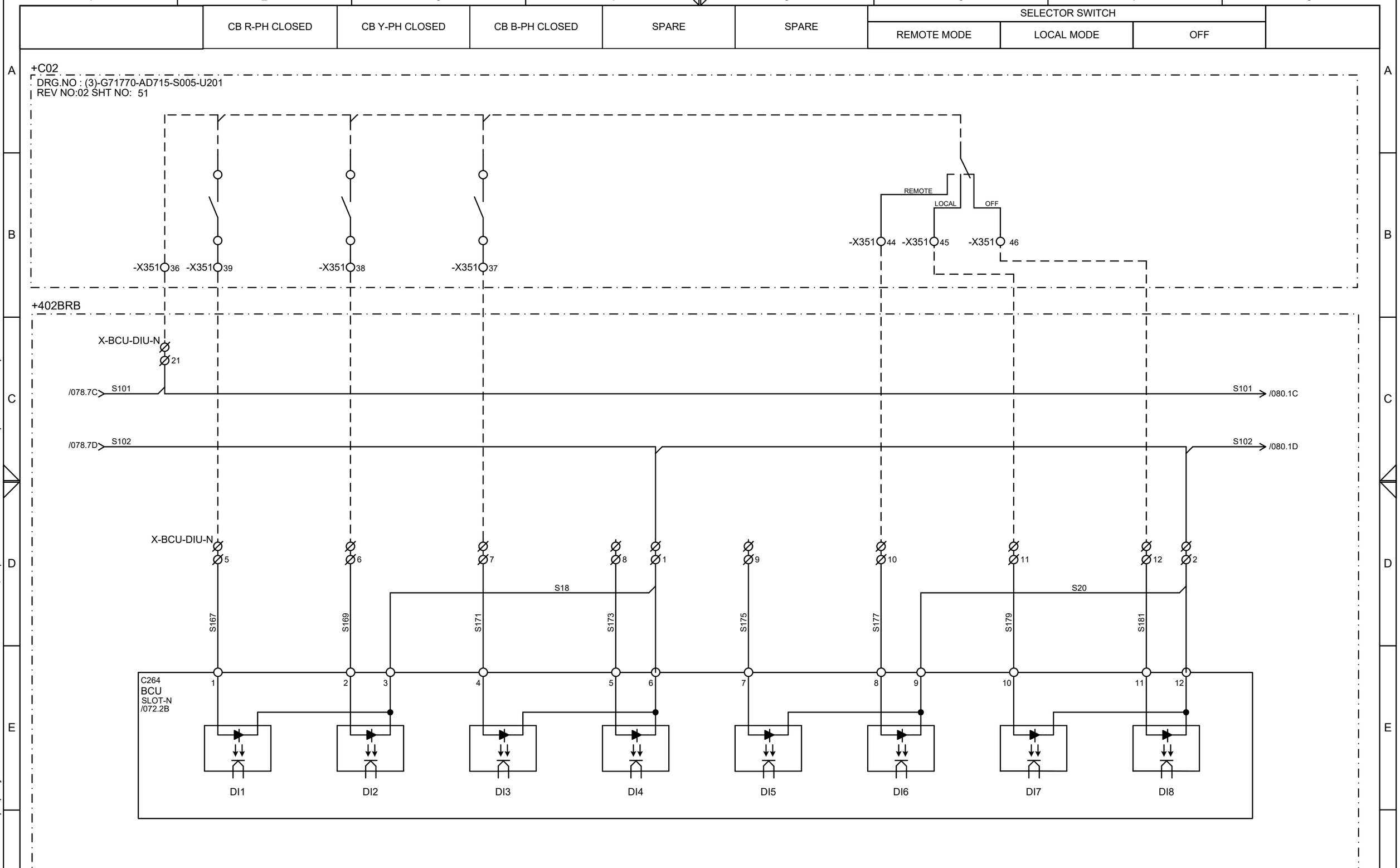

CUSTOMER : JALPURA KHURJA POWER TRANSMISSION LTD. (THE TATA POWER COMPANY LTD.) PROJECT : SUPPLY OF CRP & SAS AT 400/220kV METRO DEPOT GIS	CONTRACTOR : BAJEL PROJECTS LIMITED	TITLE : 400kV BUS REACTOR CONTROL & PROTN. PANEL (BAY-402) BCU DIGITAL INPUT CARD	PREPARED : BG REVISION: Z SHT :079
PO. No.& Date : 6100001138 DATED: 28.04.2024		PANEL TYPE : +402BRA,+402BRB	REVIEWED : BG DATE: 21-04-2025 CONT: 080
			APPROVED : RKK DRG. NO.: I1-226736082-S-02

This document is the exclusive property of Schneider Electric and shall not be used, copied or communicated to third parties without prior authorization.

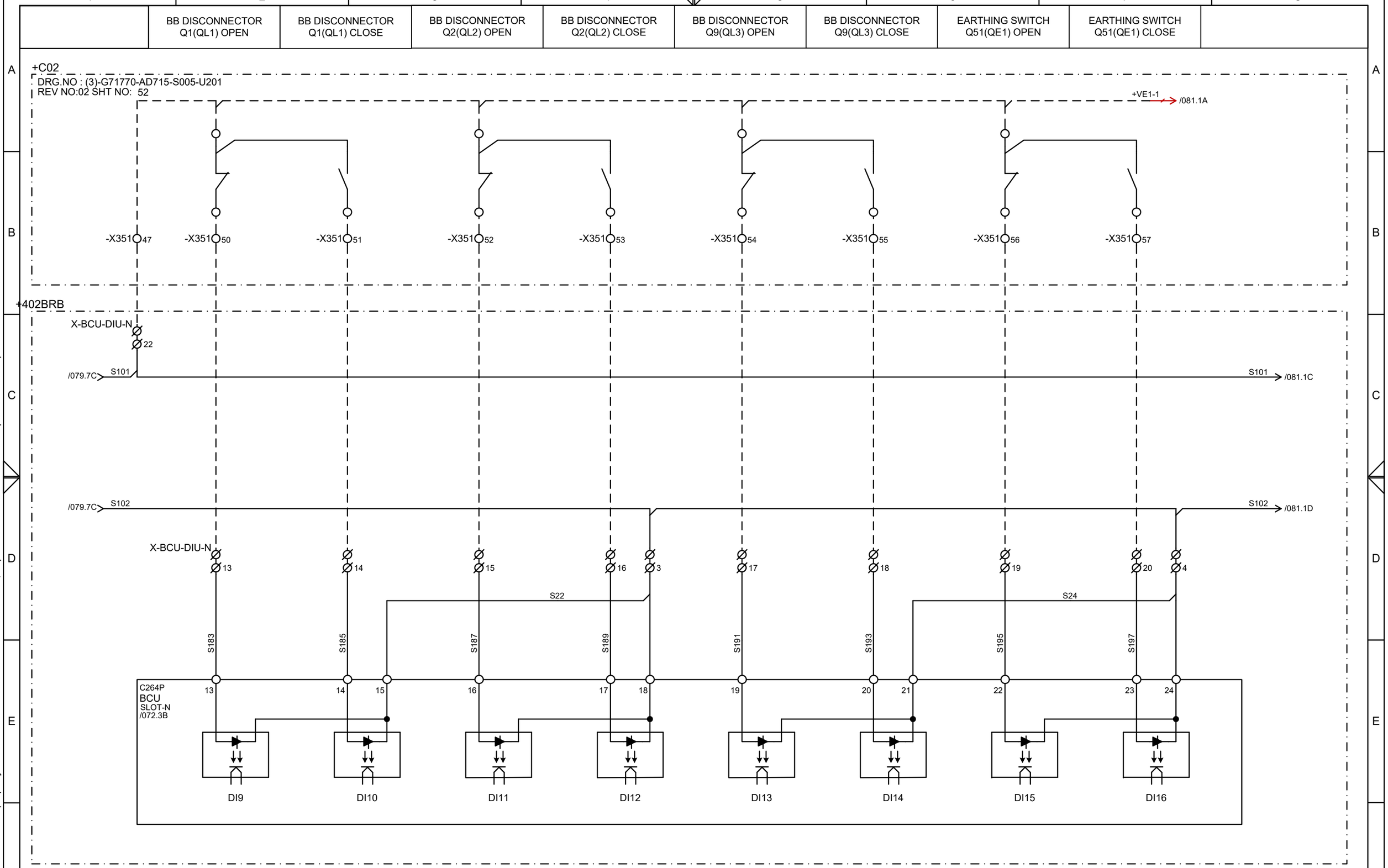

CUSTOMER : JALPURA KHURJA POWER TRANSMISSION LTD. (THE TATA POWER COMPANY LTD.) PROJECT : SUPPLY OF CRP & SAS AT 400/220kV METRO DEPOT GIS	CONTRACTOR : BAJEL PROJECTS LIMITED	TITLE : 400kV BUS REACTOR CONTROL & PROTN. PANEL (BAY-402) BCU DIGITAL INPUT CARD	PREPARED : BG REVIEWED : BG APPROVED : RKK
PO. No.& Date : 6100001138 DATED: 28.04.2024		PANEL TYPE : +402BRA,+402BRB	DRG. NO.: I1-226736082-S-02

REVISION: Z
DATE: 21-04-2025
SHT : 080
CONT: 081

This document is the exclusive property of Schneider Electric and shall not be used, copied or communicated to third parties without prior authorization.

	EARTHING SWITCH Q52(QE2) OPEN	EARTHING SWITCH Q52(QE2) CLOSE	HS EARTHING SWITCH Q8(QE3) OPEN	HS EARTHING SWITCH Q8(QE3) CLOSE	CB ZONE TRIP (ANNUNCIATION ONLY)	SPARE	SPARE	SPARE	

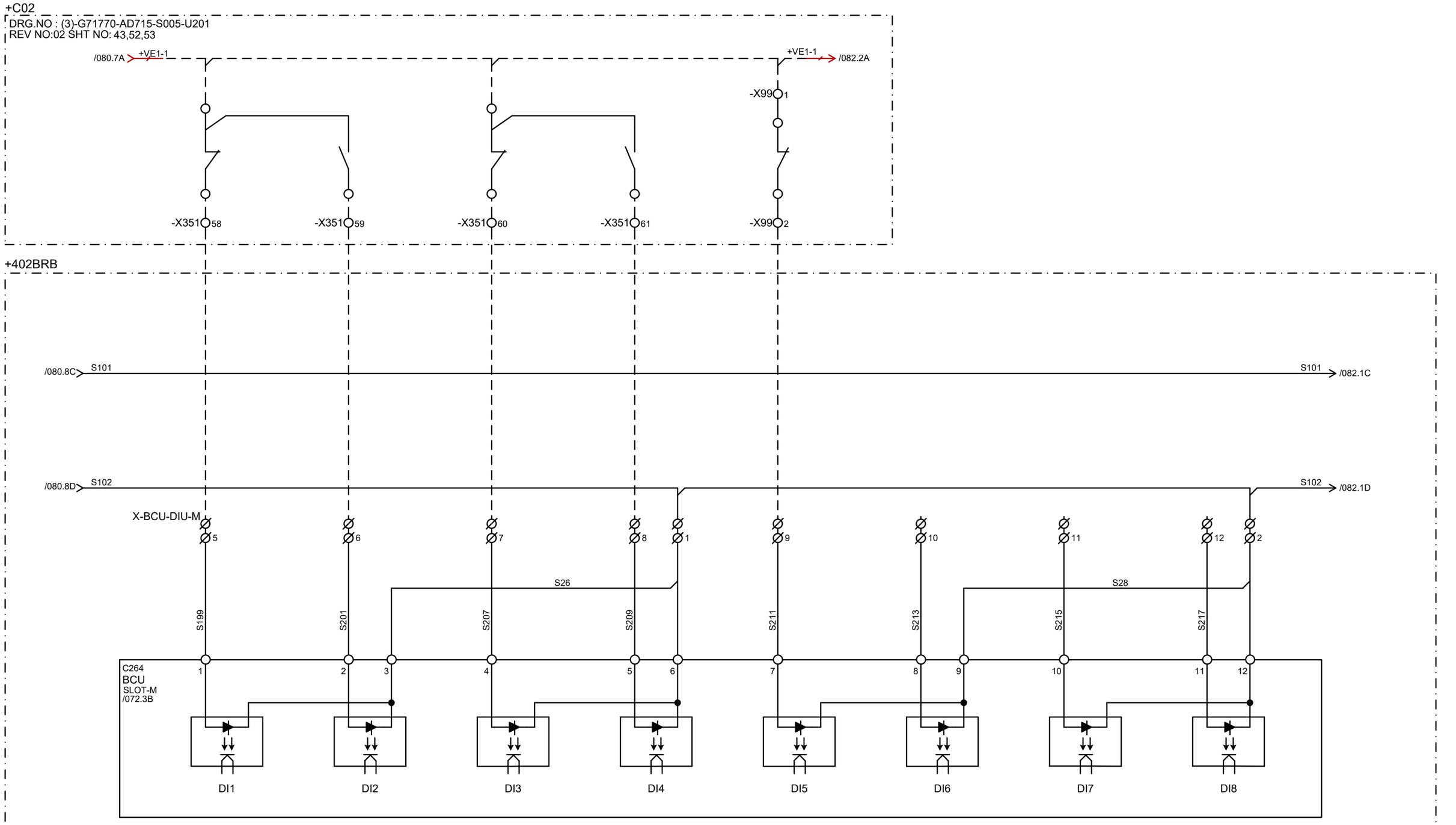

CUSTOMER : JALPURA KHURJA POWER TRANSMISSION LTD. (THE TATA POWER COMPANY LTD.) PROJECT : SUPPLY OF CRP & SAS AT 400/220kV METRO DEPOT GIS	CONTRACTOR : BAJEL PROJECTS LIMITED	Schneider Electric	TITLE : 400kV BUS REACTOR CONTROL & PROTN. PANEL (BAY-402) BCU DIGITAL INPUT CARD	PREPARED : BG REVIEWED : BG APPROVED : RKK REVISION: Z DATE: 21-04-2025 SHT :081 CONT: 082
PO. No.& Date : 6100001138 DATED: 28.04.2024			PANEL TYPE : +402BRA,+402BRB	DRG. NO.: I1-226736082-S-02

This document is the exclusive property of Schneider Electric and shall not be used, copied or communicated to third parties without prior authorization.

This document is the exclusive property of Schneider Electric and shall not be used, copied or communicated to third parties without prior authorization.

SPARE	PSD CONTROL SUPPLY ON	PSD BYPASS	PSD IN SERVICE	PSD-SENSOR ERROR-SENSOR ERROR	PSD-CB VTG ERROR-CB VTG ERROR	PSD-SYNC DATA ERROR-SYNC DATA ERROR	PSD-SYNC DATA FAIL-SYNC DATA FAIL

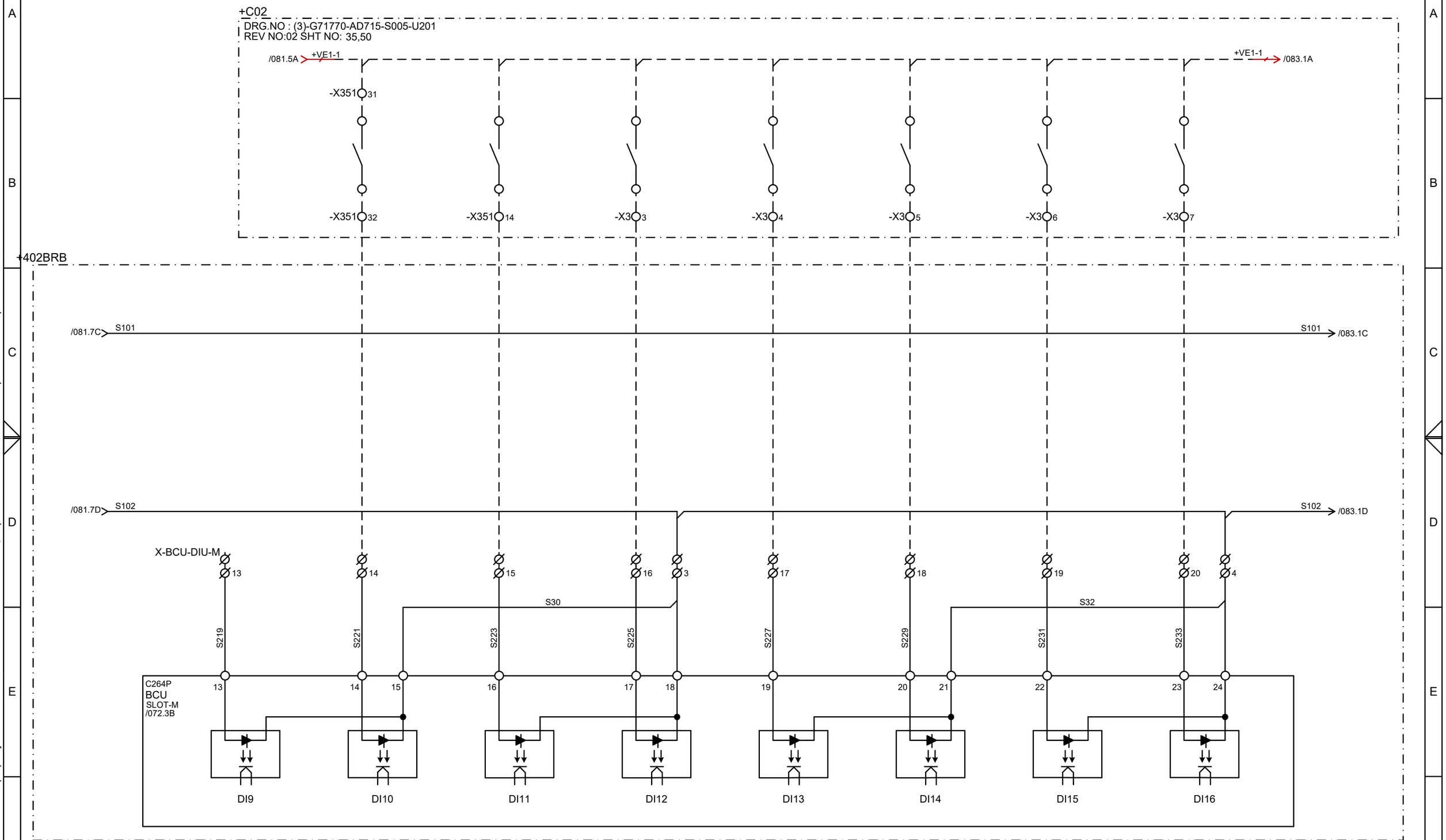

CUSTOMER : JALPURA KHURJA POWER TRANSMISSION LTD. (THE TATA POWER COMPANY LTD.) **PROJECT :** SUPPLY OF CRP & SAS AT 400/220kV METRO DEPOT GIS	**CONTRACTOR :** BAJEL PROJECTS LIMITED	Schneider Electric	**TITLE :** 400kV BUS REACTOR CONTROL & PROTN. PANEL (BAY-402) BCU DIGITAL INPUT CARD
PO. No.& Date : 6100001138 DATED: 28.04.2024			**PANEL TYPE :** +402BRA,+402BRB

PREPARED : BG	REVISION: Z	SHT : 082
REVIEWED : BG	DATE: 21-04-2025	CONT: 083
APPROVED : RKK		
DRG. NO.: I1-226736082-S-02		

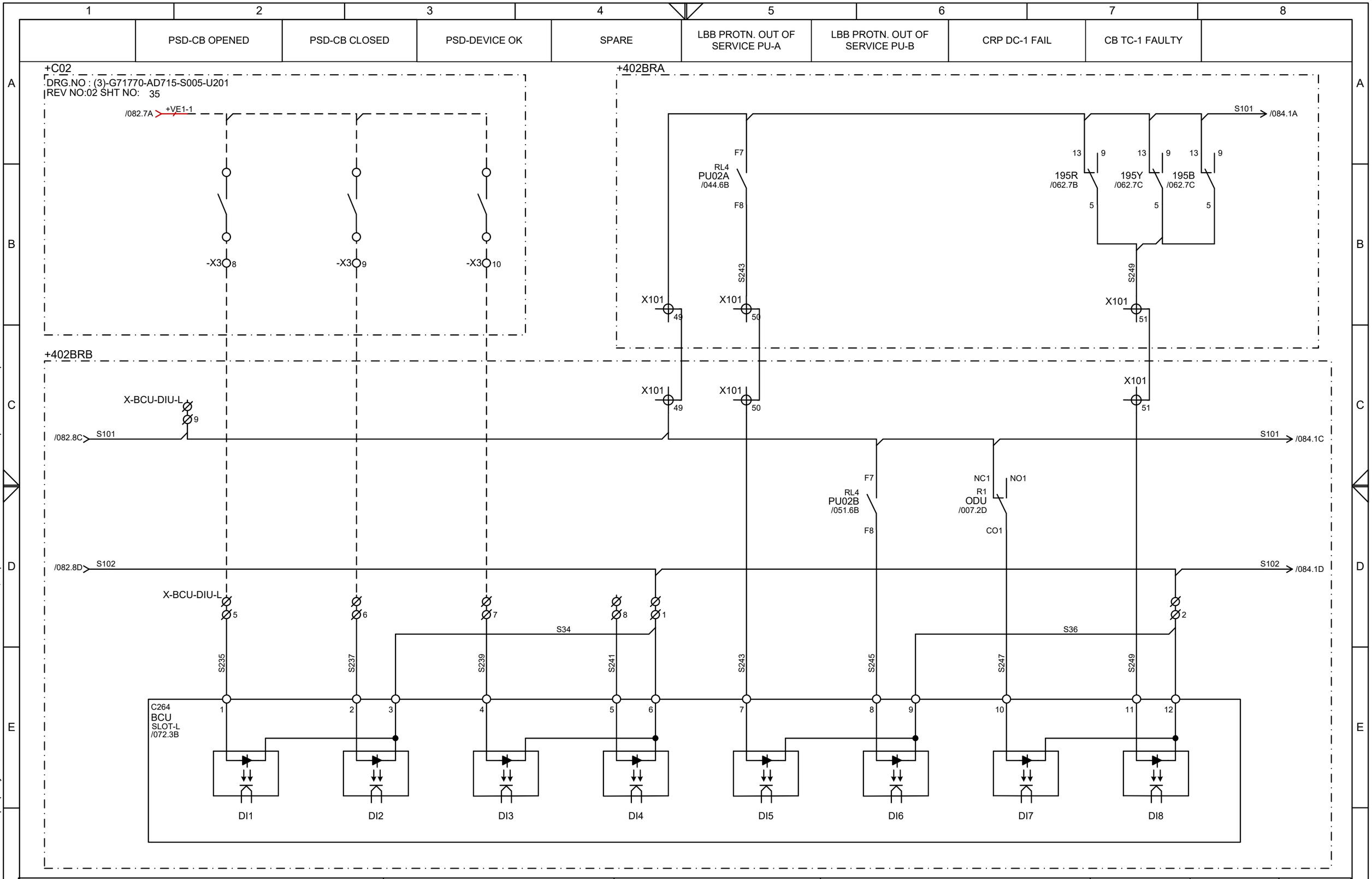

CUSTOMER : JALPURA KHURJA POWER TRANSMISSION LTD. (THE TATA POWER COMPANY LTD.) PROJECT : SUPPLY OF CRP & SAS AT 400/220kV METRO DEPOT GIS	CONTRACTOR : BAJEL PROJECTS LIMITED	TITLE : 400kV BUS REACTOR CONTROL & PROTN. PANEL (BAY-402) BCU DIGITAL INPUT CARD	PREPARED : BG REVISION: Z SHT : 083
PO. No.& Date : 6100001138 DATED: 28.04.2024			REVIEWED : BG DATE: 21-04-2025 CONT: 084
		PANEL TYPE : +402BRA,+402BRB	APPROVED : RKK DRG. NO.: I1-226736082-S-02

This document is the exclusive property of Schneider Electric and shall not be used, copied or communicated to third parties without prior authorization.

This document is the exclusive property of Schneider Electric and shall not be used, copied or communicated to third parties without prior authorization.

PU-A FAULTY	96A RLY FAULTY	CRP DC-2 FAIL	TC-2 FAULTY	PU-B FAULTY	96B RLY FAULTY	MANUAL CB OPEN ALARM	MANUAL CB CLOSE ALARM

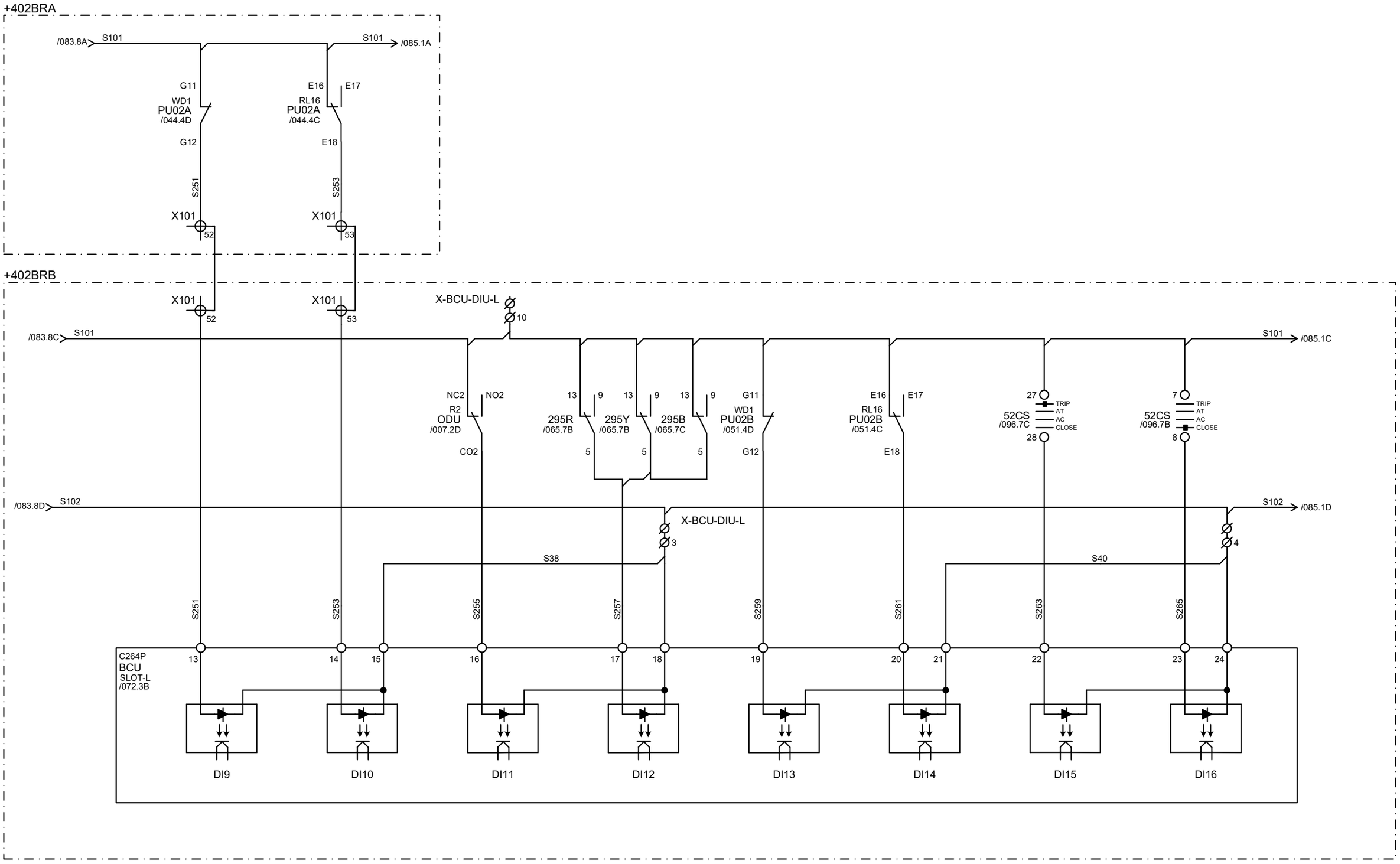

CUSTOMER : JALPURA KHURJA POWER TRANSMISSION LTD. (THE TATA POWER COMPANY LTD.) PROJECT : SUPPLY OF CRP & SAS AT 400/220kV METRO DEPOT GIS	CONTRACTOR : BAJEL PROJECTS LIMITED	Schneider Electric	TITLE : 400kV BUS REACTOR CONTROL & PROTN. PANEL (BAY-402) BCU DIGITAL INPUT CARD	PREPARED : BG REVIEWED : BG APPROVED : RKK	REVISION: Z DATE: 21-04-2025	SHT :084 CONT: 085
PO. No.& Date : 6100001138 DATED: 28.04.2024			PANEL TYPE : +402BRA,+402BRB	DRG. NO.: I1-226736082-S-02		

SPARE	86/96 TRIP	SPARE	LBB PROTN. OPTD PU-A	LBB PROTN. OPTD PU-B	SPARE	SPARE	SPARE

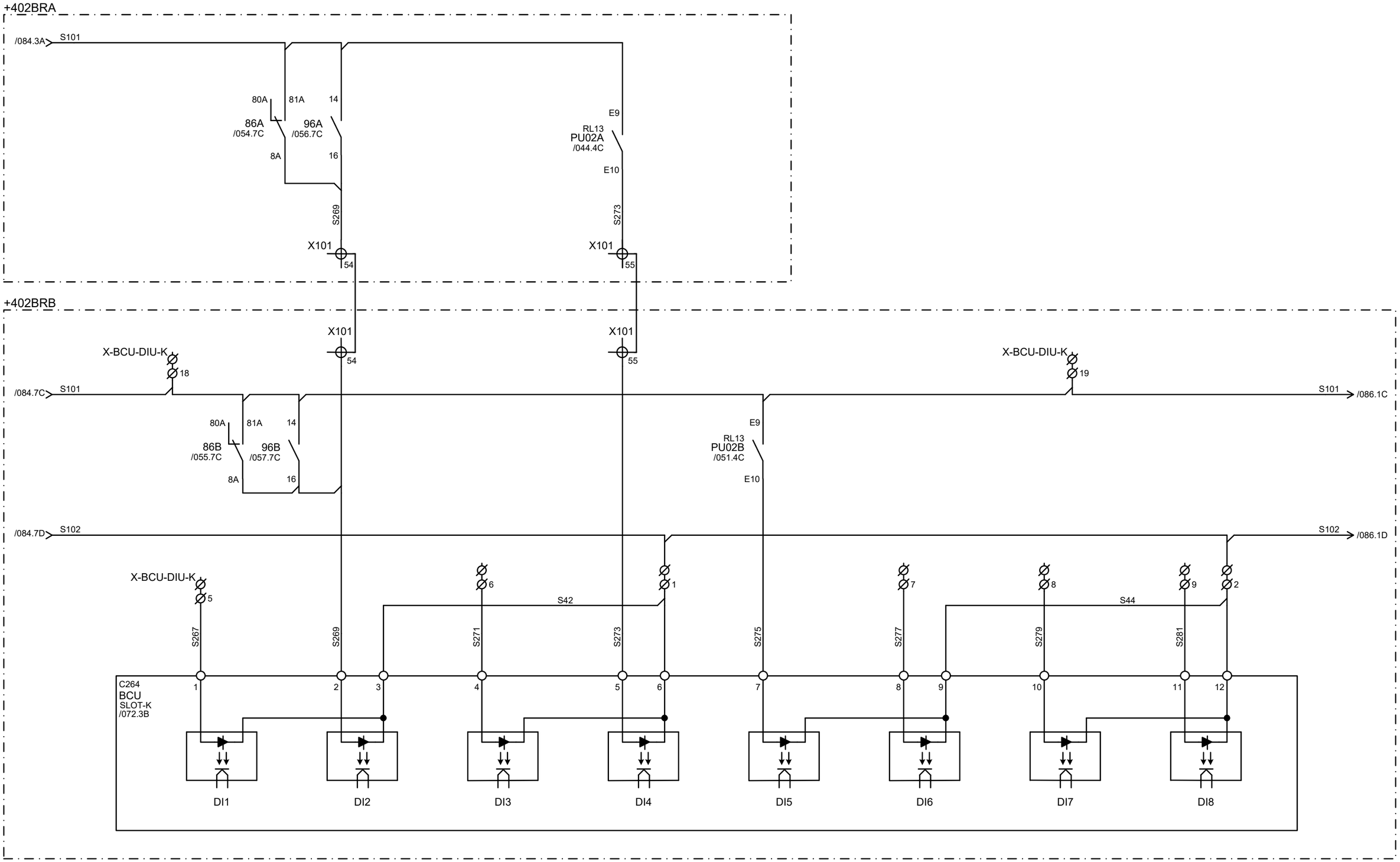

CUSTOMER : JALPURA KHURJA POWER TRANSMISSION LTD. (THE TATA POWER COMPANY LTD.) PROJECT : SUPPLY OF CRP & SAS AT 400/220kV METRO DEPOT GIS	CONTRACTOR : BAJEL PROJECTS LIMITED	Schneider Electric	TITLE : 400kV BUS REACTOR CONTROL & PROTN. PANEL (BAY-402) BCU DIGITAL INPUT CARD	PREPARED : BG REVIEWED : BG APPROVED : RKK	REVISION: Z DATE: 21-04-2025	SHT : 085 CONT: 086
PO. No.& Date : 6100001138 DATED: 28.04.2024			PANEL TYPE : +402BRA,+402BRB	DRG. NO.: I1-226736082-S-02		

This document is the exclusive property of Schneider Electric and shall not be used, copied or communicated to third parties without prior authorization.

	DRIVE STUCK	SPARE	SPARE	SPARE	SPARE	SPARE	SPARE	SPARE

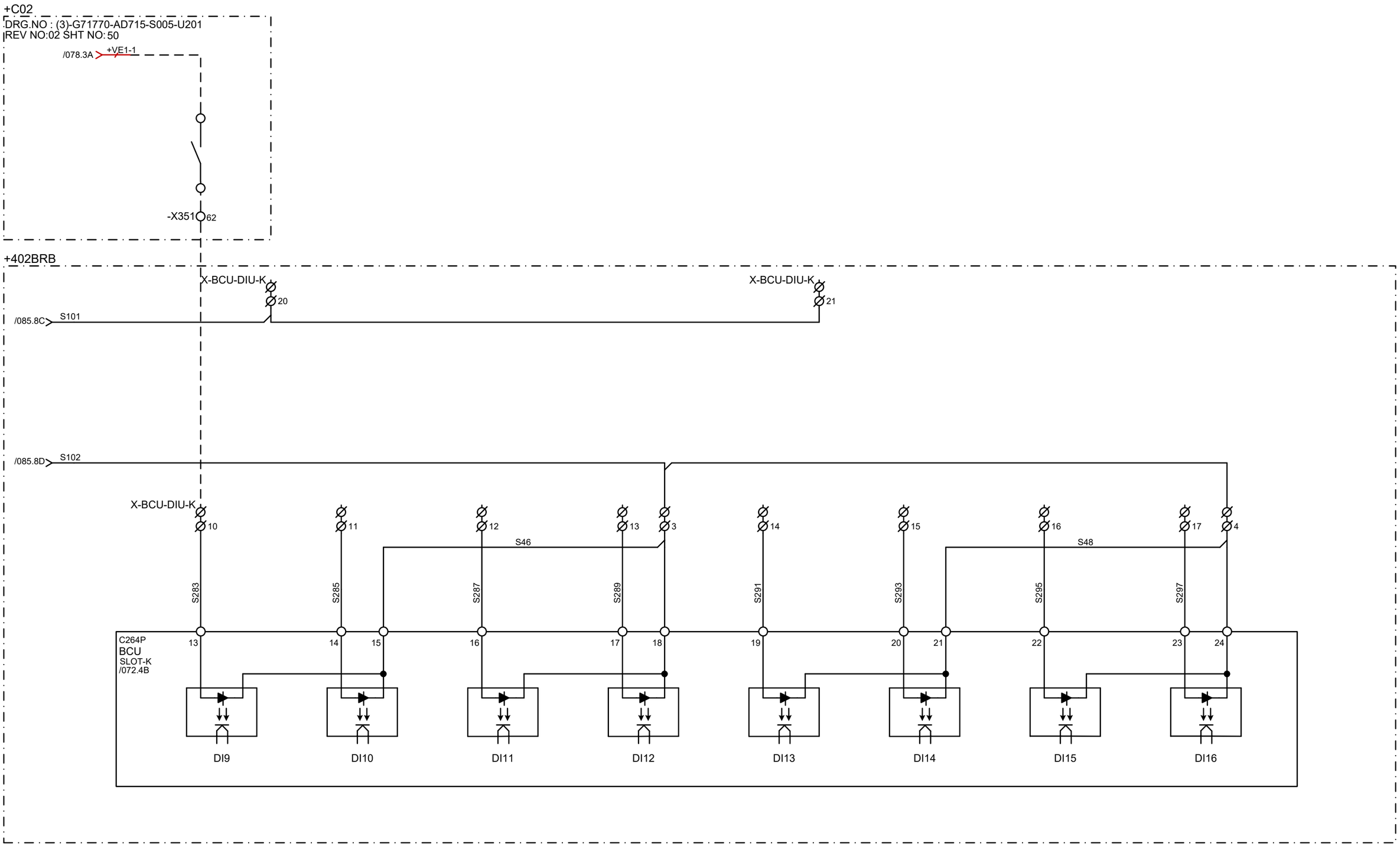

CUSTOMER : JALPURA KHURJA POWER TRANSMISSION LTD. (THE TATA POWER COMPANY LTD.) PROJECT : SUPPLY OF CRP & SAS AT 400/220kV METRO DEPOT GIS	CONTRACTOR : BAJEL PROJECTS LIMITED	Schneider Electric	TITLE : 400kV BUS REACTOR CONTROL & PROTN. PANEL (BAY-402) BCU DIGITAL INPUT CARD	PREPARED : BG REVISION: Z SHT :086
PO. No.& Date : 6100001138 DATED: 28.04.2024				REVIEWED : BG DATE: 21-04-2025 CONT: 087
			PANEL TYPE : +402BRA,+402BRB	APPROVED : RKK DRG. NO.: I1-226736082-S-02

This document is the exclusive property of Schneider Electric and shall not be used, copied or communicated to third parties without prior authorization.

This document is the exclusive property of Schneider Electric and shall not be used, copied or communicated to third parties without prior authorization.

	(401-52)CB OPEN COMMAND-1	(401-52)CB CLOSE COMMAND-1	(401-52)CB OPEN COMMAND-2	(401-52)CB CLOSE COMMAND-2	SPARE	BB DISCONNECTOR Q1(QL1) OPEN	BB DISCONNECTOR Q1(QL1) CLOSE	BB DISCONNECTOR Q1(QL1) COMMON CMD	SPARE	SPARE

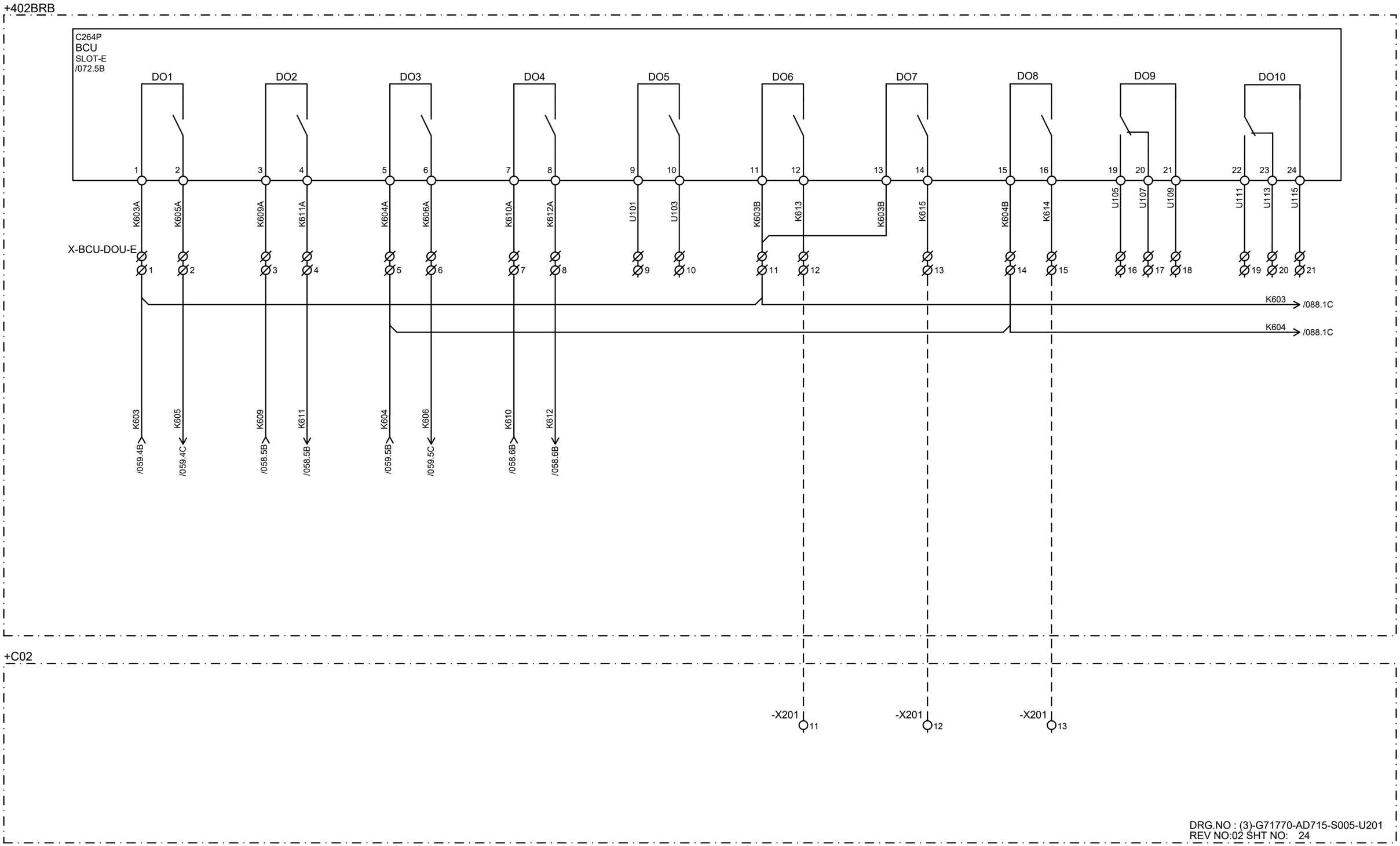

DRG.NO : (3)-G71770-AD715-S005-U201
REV NO:02 SHT NO: 24

CUSTOMER : JALPURA KHURJA POWER TRANSMISSION LTD. (THE TATA POWER COMPANY LTD.) PROJECT : SUPPLY OF CRP & SAS AT 400/220kV METRO DEPOT GIS	CONTRACTOR : BAJEL PROJECTS LIMITED	TITLE : 400kV BUS REACTOR CONTROL & PROTN. PANEL (BAY-402) BCU DIGITAL OUTPUT CARD	PREPARED : BG REVIEWED : BG APPROVED : RKK REVISION: Z DATE: 21-04-2025 SHT :087 CONT: 088
PO. No.& Date : 6100001138 DATED: 28.04.2024		PANEL TYPE : +402BRA,+402BRB	DRG. NO.: I1-226736082-S-02

This document is the exclusive property of Schneider Electric and shall not be used, copied or communicated to third parties without prior authorization.

BB DISCONNECTOR Q2(QL2) OPEN	BB DISCONNECTOR Q2(QL2) CLOSE	BB DISCONNECTOR Q2 (QL2) COMMON CMD	EARTHING SWITCH Q51(QE1) OPEN	EARTHING SWITCH Q51(QE1) CLOSE	EARTHING SWITCH Q51(QE1) COMMON CMD	EARTHING SWITCH Q52(QE2) OPEN	EARTHING SWITCH Q52(QE2) CLOSE	EARTHING SWITCH Q52(QE2) COMMON CMD	SPARE

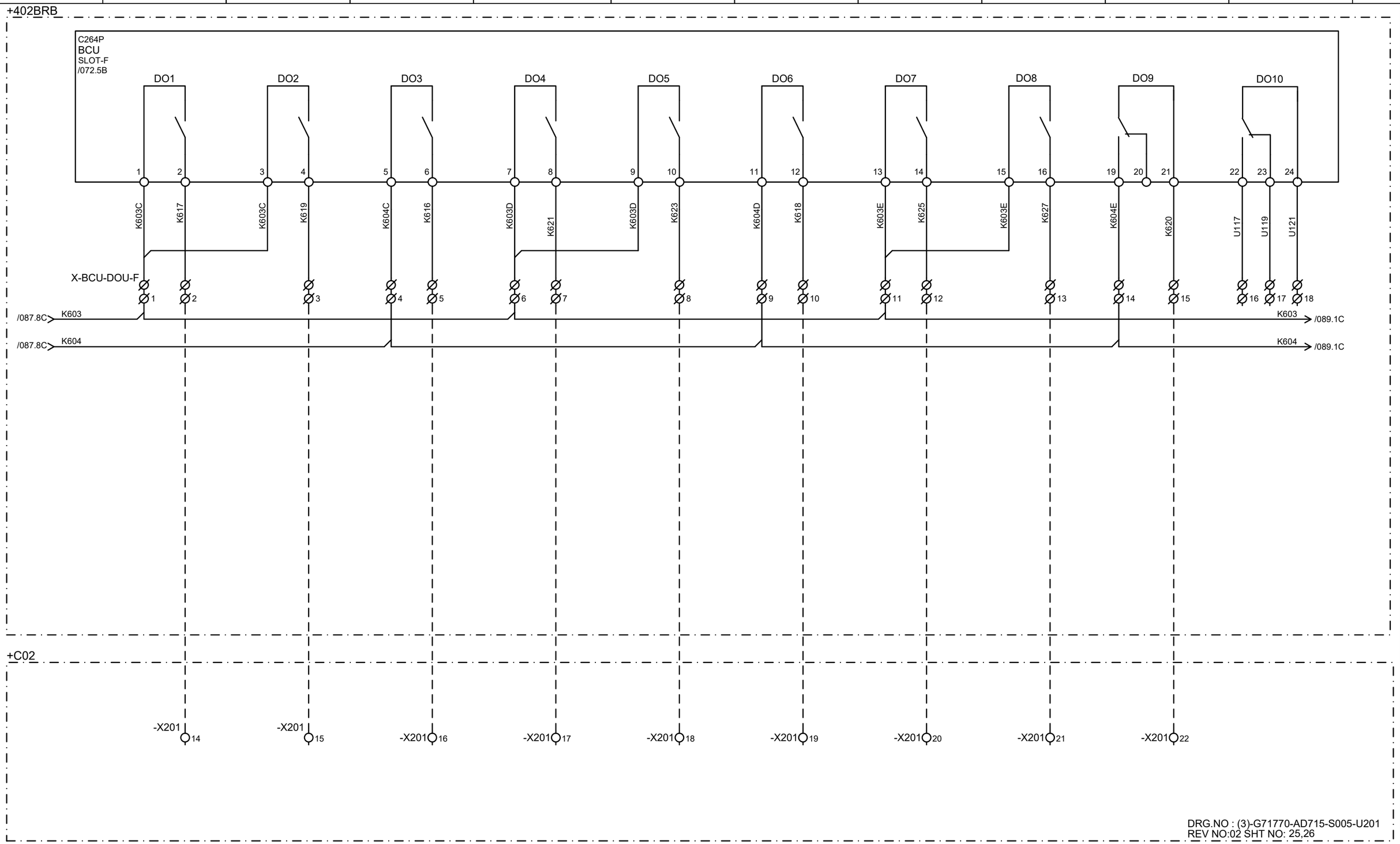

CUSTOMER : JALPURA KHURJA POWER TRANSMISSION LTD. (THE TATA POWER COMPANY LTD.) PROJECT : SUPPLY OF CRP & SAS AT 400/220kV METRO DEPOT GIS	CONTRACTOR : BAJEL PROJECTS LIMITED	Schneider Electric	TITLE : 400kV BUS REACTOR CONTROL & PROTN. PANEL (BAY-402) BCU DIGITAL OUTPUT CARD	PREPARED : BG REVIEWED : BG APPROVED : RKK REVISION: Z DATE: 21-04-2025 SHT : 088 CONT: 089
PO. No.& Date : 6100001138 DATED: 28.04.2024			PANEL TYPE : +402BRA,+402BRB	DRG. NO.: I1-226736082-S-02

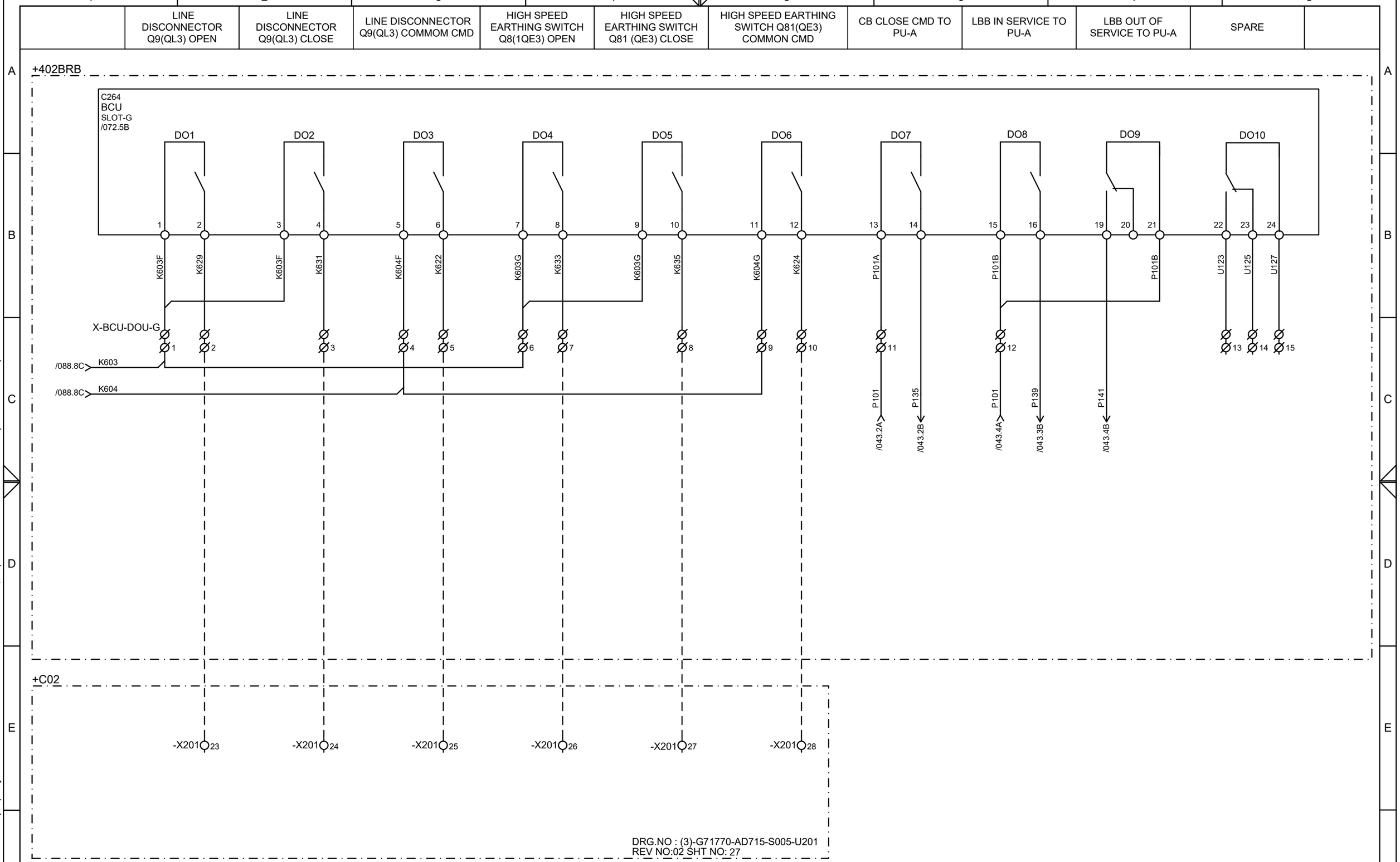

CUSTOMER : JALPURA KHURJA POWER TRANSMISSION LTD. (THE TATA POWER COMPANY LTD.) PROJECT : SUPPLY OF CRP & SAS AT 400/220kV METRO DEPOT GIS	CONTRACTOR : BAJEL PROJECTS LIMITED	Schneider Electric	TITLE : 400kV BUS REACTOR CONTROL & PROTN. PANEL (BAY-402) BCU DIGITAL OUTPUT CARD	PREPARED : BG REVIEWED : BG APPROVED : RKK REVISION: Z DATE: 21-04-2025 SHT :089 CONT:090
PO. No.& Date : 6100001138 DATED: 28.04.2024			PANEL TYPE : +402BRA,+402BRB	DRG. NO.: I1-226736082-S-02

This document is the exclusive property of Schneider Electric and shall not be used, copied or communicated to third parties without prior authorization.

This document is the exclusive property of Schneider Electric and shall not be used, copied or communicated to third parties without prior authorization.

TRIP RELAY 86A RESET	TRIP RELAY 86B RESET	PSD OUT OF SERVICE CMD	PSD IN SERVICE CMD	SYNC OK	SPARE	CB CLOSE CMD TO PU-B	LBB IN SERVICE TO PU-B	LBB OUT OF SERVICE TO PU-B	SPARE

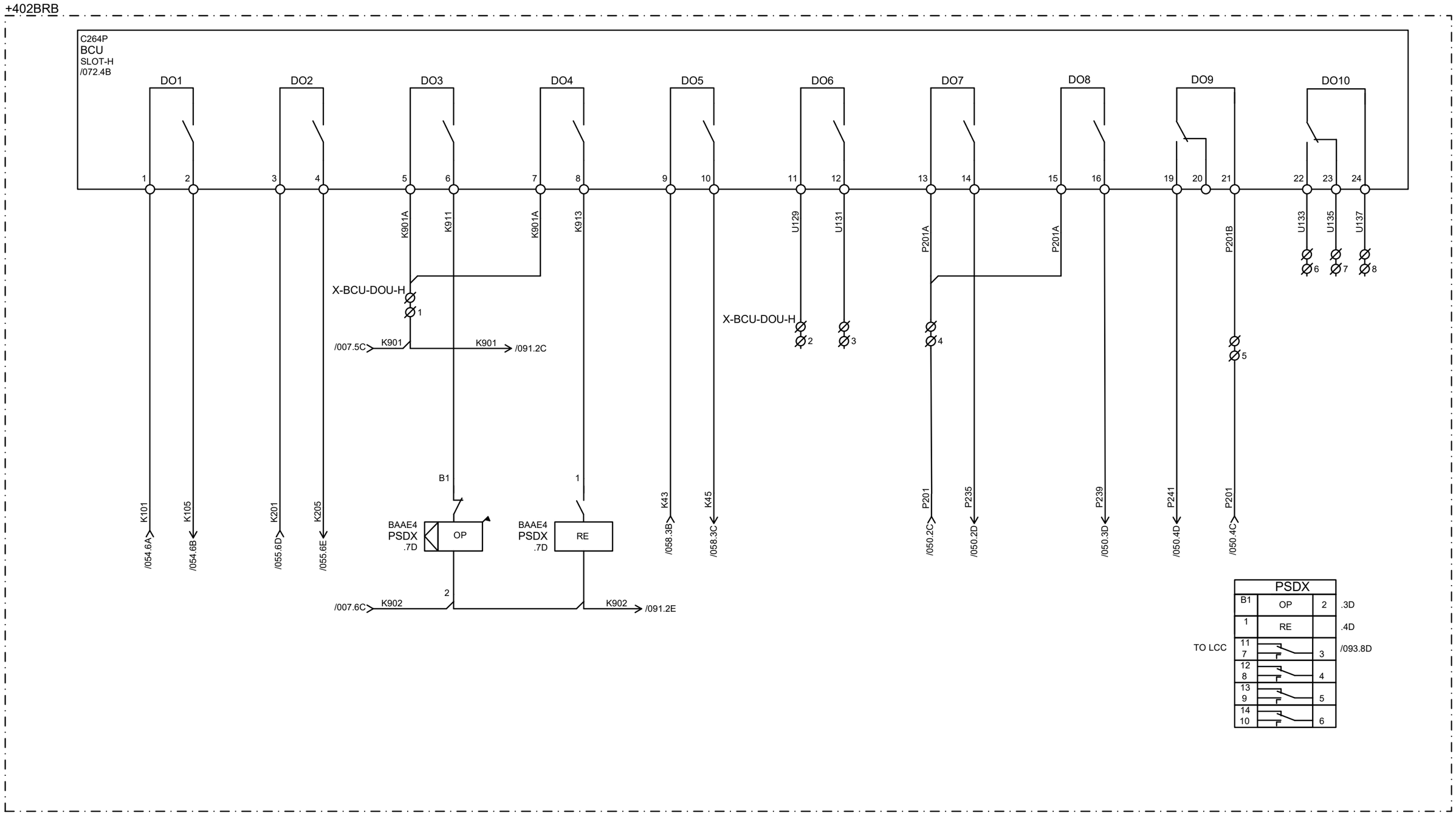

CUSTOMER : JALPURA KHURJA POWER TRANSMISSION LTD. (THE TATA POWER COMPANY LTD.) PROJECT : SUPPLY OF CRP & SAS AT 400/220kV METRO DEPOT GIS	CONTRACTOR : BAJEL PROJECTS LIMITED	Schneider Electric	TITLE : 400kV BUS REACTOR CONTROL & PROTN. PANEL (BAY-402) BCU DIGITAL OUTPUT CARD	PREPARED : BG REVIEWED : BG APPROVED : RKK	REVISION: Z DATE: 21-04-2025	SHT :090 CONT: 091
PO. No.& Date : 6100001138 DATED: 28.04.2024			PANEL TYPE : +402BRA,+402BRB	DRG. NO.: I1-226736082-S-02		

96A RELAY RESET	96B RELAY RESET	BUS-1 VT SELECT	BUS-1 VT DE- SELECT	BUS-2 VT SELECT	BUS-2 VT DE- SELECT	SPARE	SPARE	SPARE	SPARE

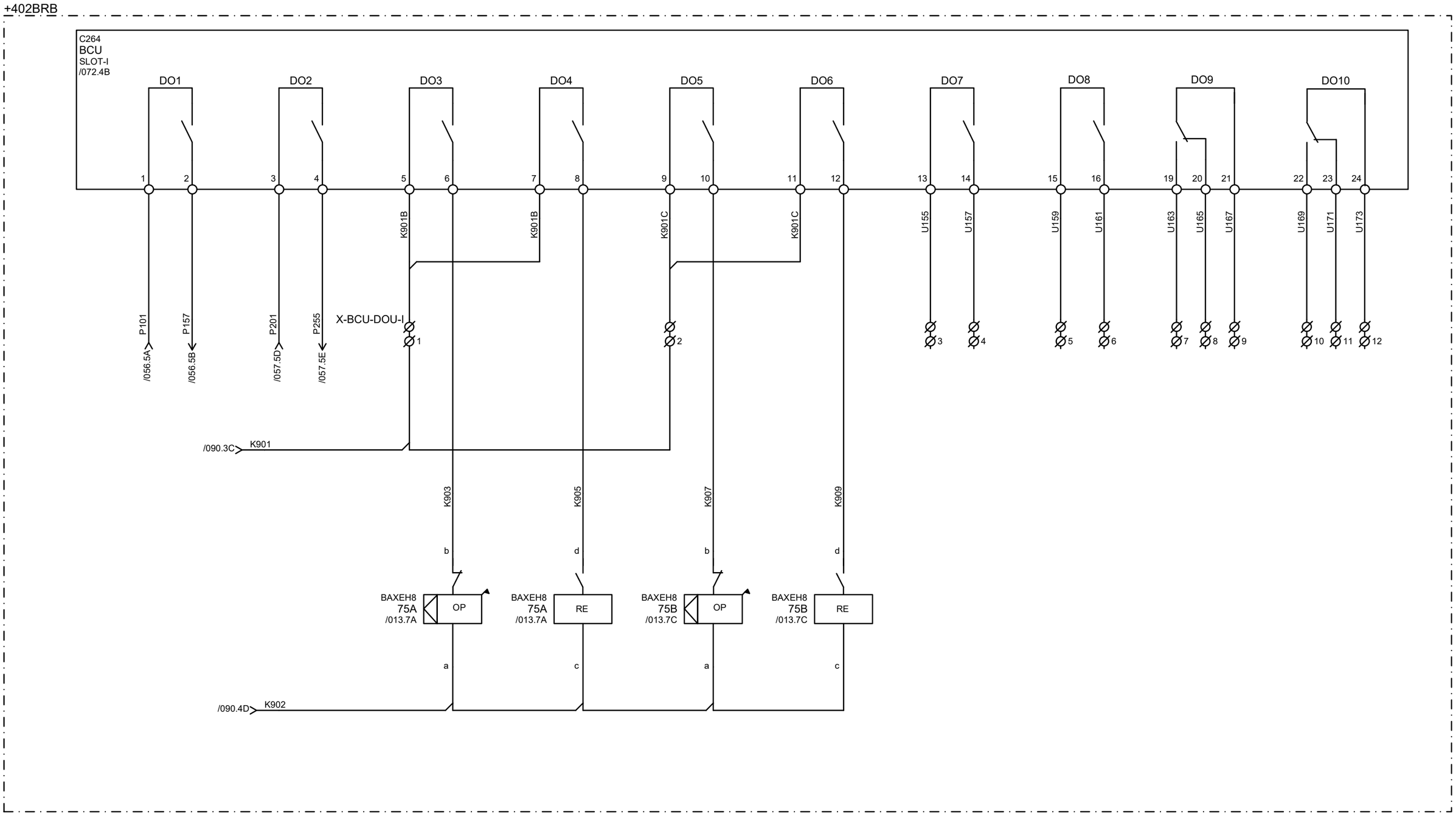

CUSTOMER : JALPURA KHURJA POWER TRANSMISSION LTD. (THE TATA POWER COMPANY LTD.) PROJECT : SUPPLY OF CRP & SAS AT 400/220kV METRO DEPOT GIS	CONTRACTOR : BAJEL PROJECTS LIMITED	Schneider Electric	TITLE : 400kV BUS REACTOR CONTROL & PROTN. PANEL (BAY-402) BCU DIGITAL OUTPUT CARD	PREPARED : BG REVIEWED : BG APPROVED : RKK	REVISION: Z DATE: 21-04-2025	SHT :091 CONT: 092
PO. No.& Date : 6100001138 DATED: 28.04.2024			PANEL TYPE : +402BRA,+402BRB	DRG. NO.: I1-226736082-S-02		

This document is the exclusive property of Schneider Electric and shall not be used, copied or communicated to third parties without prior authorization.

REACTOR ANALOG SIGNALS		SPARE
WTI	OTI	

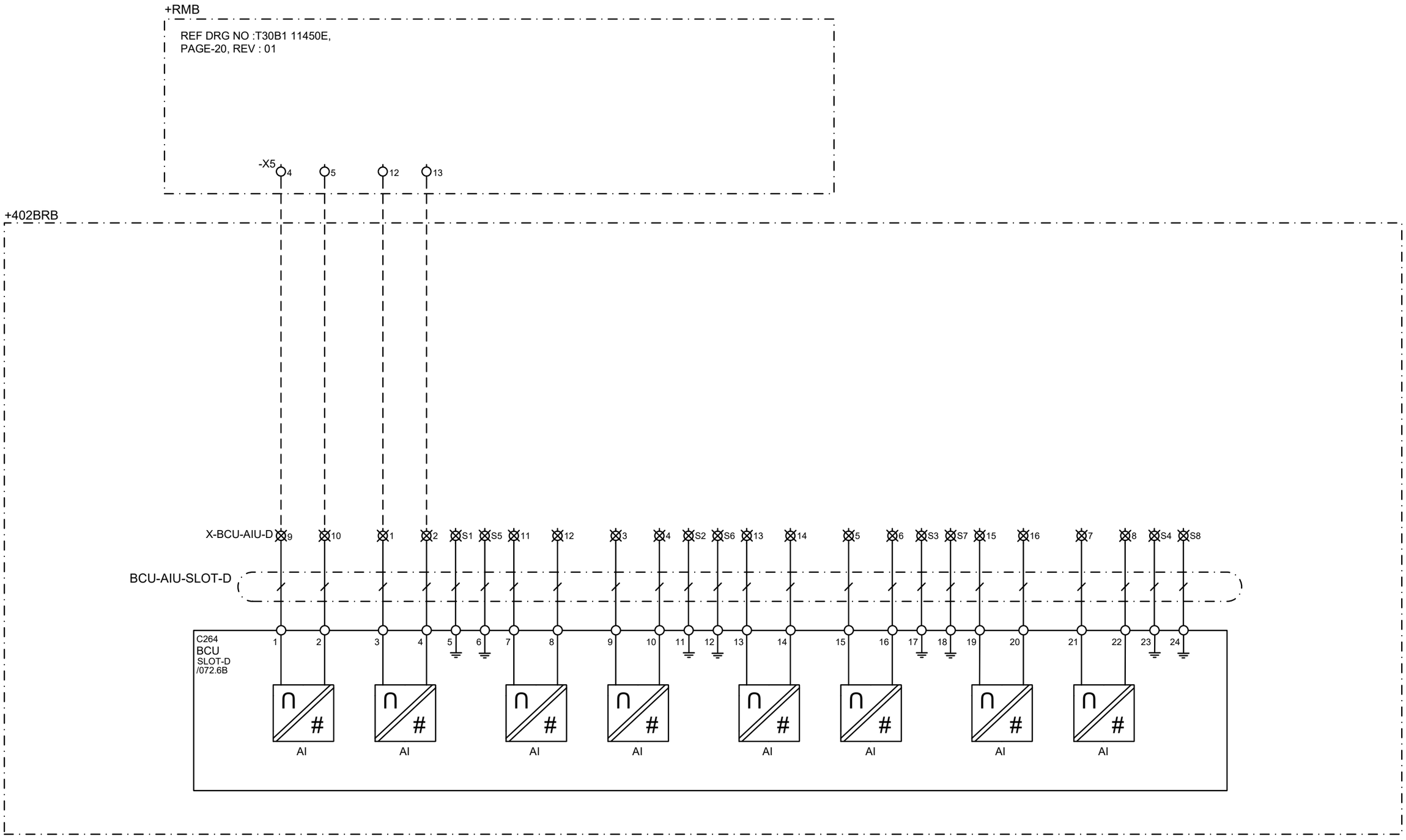

CUSTOMER : JALPURA KHURJA POWER TRANSMISSION LTD. (THE TATA POWER COMPANY LTD.) PROJECT : SUPPLY OF CRP & SAS AT 400/220kV METRO DEPOT GIS	CONTRACTOR : BAJEL PROJECTS LIMITED	Schneider Electric	TITLE : 400kV BUS REACTOR CONTROL & PROTN. PANEL (BAY-402) BCU-ANALOG INPUT CARD	PREPARED : BG REVIEWED : BG APPROVED : RKK	REVISION: Z DATE: 21-04-2025	SHT :092 CONT: 090
PO. No.& Date : 6100001138 DATED: 28.04.2024			PANEL TYPE : +402BRA,+402BRB	DRG. NO.: I1-226736082-S-02		

This document is the exclusive property of Schneider Electric and shall not be used, copied or communicated to third parties without prior authorization.

This document is the exclusive property of Schneider Electric and shall not be used, copied or communicated to third parties without prior authorization.

86A/86B TRIP RELAY OPTD	DIFF.PROTN. OPTD.	REF PROTN. OPTD.	BUCHHOLZ TRIP OPTD-1	PRD TRIP OPTD-1 &2	PSD OUT OF SERVICE

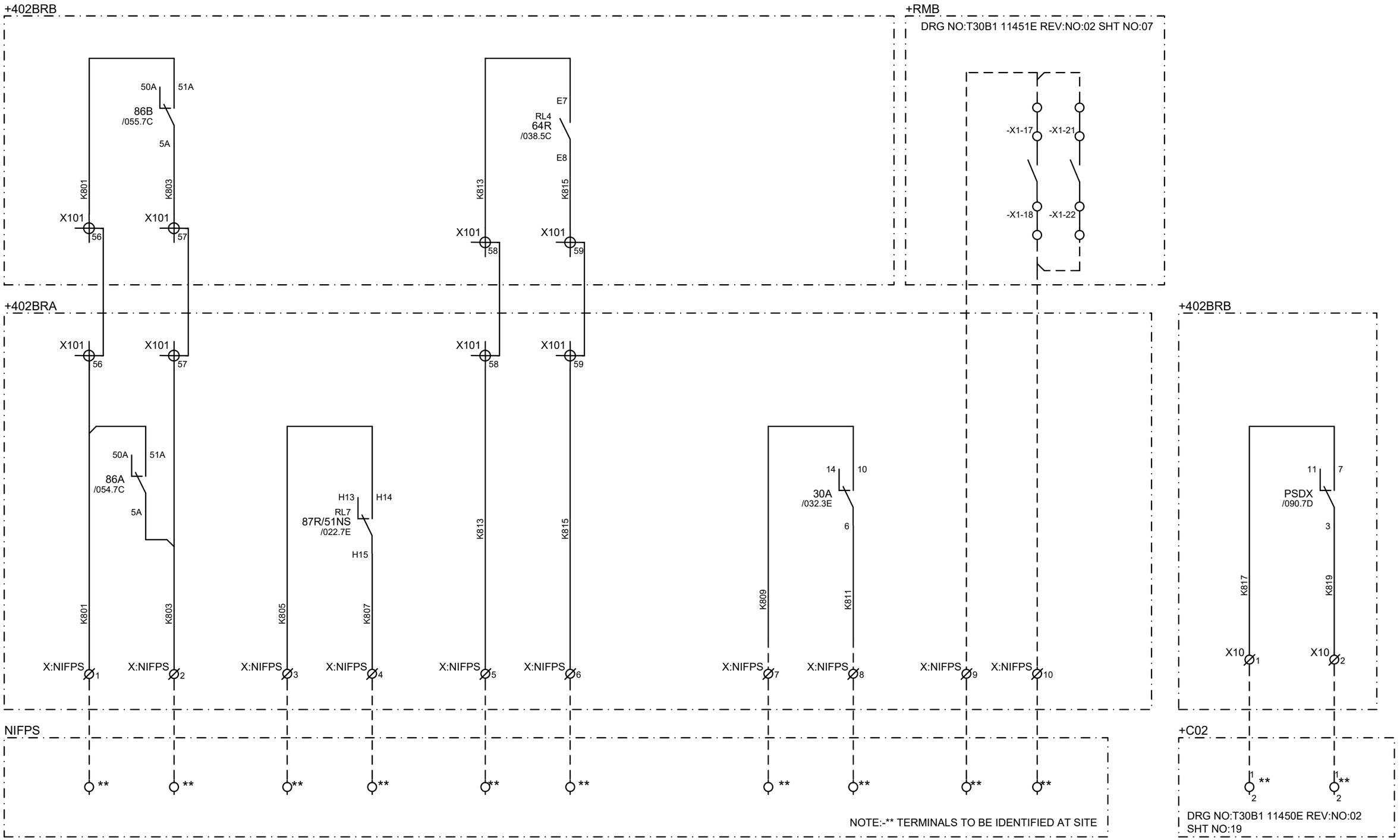

CUSTOMER : JALPURA KHURJA POWER TRANSMISSION LTD. (THE TATA POWER COMPANY LTD.) PROJECT : SUPPLY OF CRP & SAS AT 400/220kV METRO DEPOT GIS	CONTRACTOR : BAJEL PROJECTS LIMITED	Schneider Electric	TITLE : 400kV BUS REACTOR CONTROL & PROTN. PANEL (BAY-402) NIFPS PANEL CONTACT DISTRIBUTION	PREPARED : BG REVIEWED : BG APPROVED : RKK	REVISION: Z DATE: 21-04-2025	SHT :093 CONT: 094
PO. No.& Date : 6100001138 DATED: 28.04.2024			PANEL TYPE : +402BRA,+402BRB	DRG. NO.: I1-226736082-S-02		

SPARE CONTACTS DISTRIBUTION

+402BRA

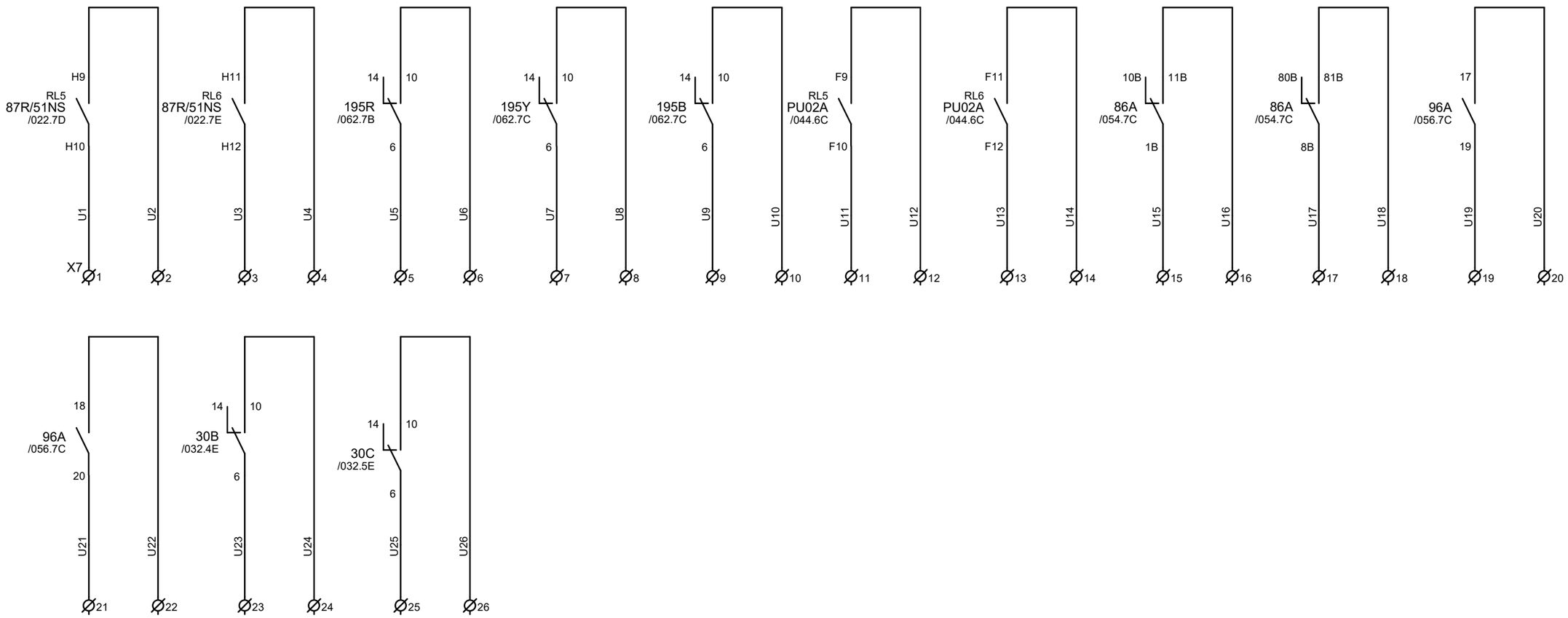

CUSTOMER : JALPURA KHURJA POWER TRANSMISSION LTD. (THE TATA POWER COMPANY LTD.) PROJECT : SUPPLY OF CRP & SAS AT 400/220kV METRO DEPOT GIS	CONTRACTOR : BAJEL PROJECTS LIMITED	Schneider Electric	TITLE : 400kV BUS REACTOR CONTROL & PROTN. PANEL (BAY-402) SPARE CONTACT DISTRIBUTION	PREPARED : BG REVIEWED : BG APPROVED : RKK	REVISION: Z DATE: 21-04-2025	SHT : 094 CONT: 095
PO. No.& Date : 6100001138 DATED: 28.04.2024			PANEL TYPE : +402BRA,+402BRB	DRG. NO.: I1-226736082-S-02		

This document is the exclusive property of Schneider Electric and shall not be used, copied or communicated to third parties without prior authorization.

SPARE CONTACTS DISTRIBUTION

+402BRB

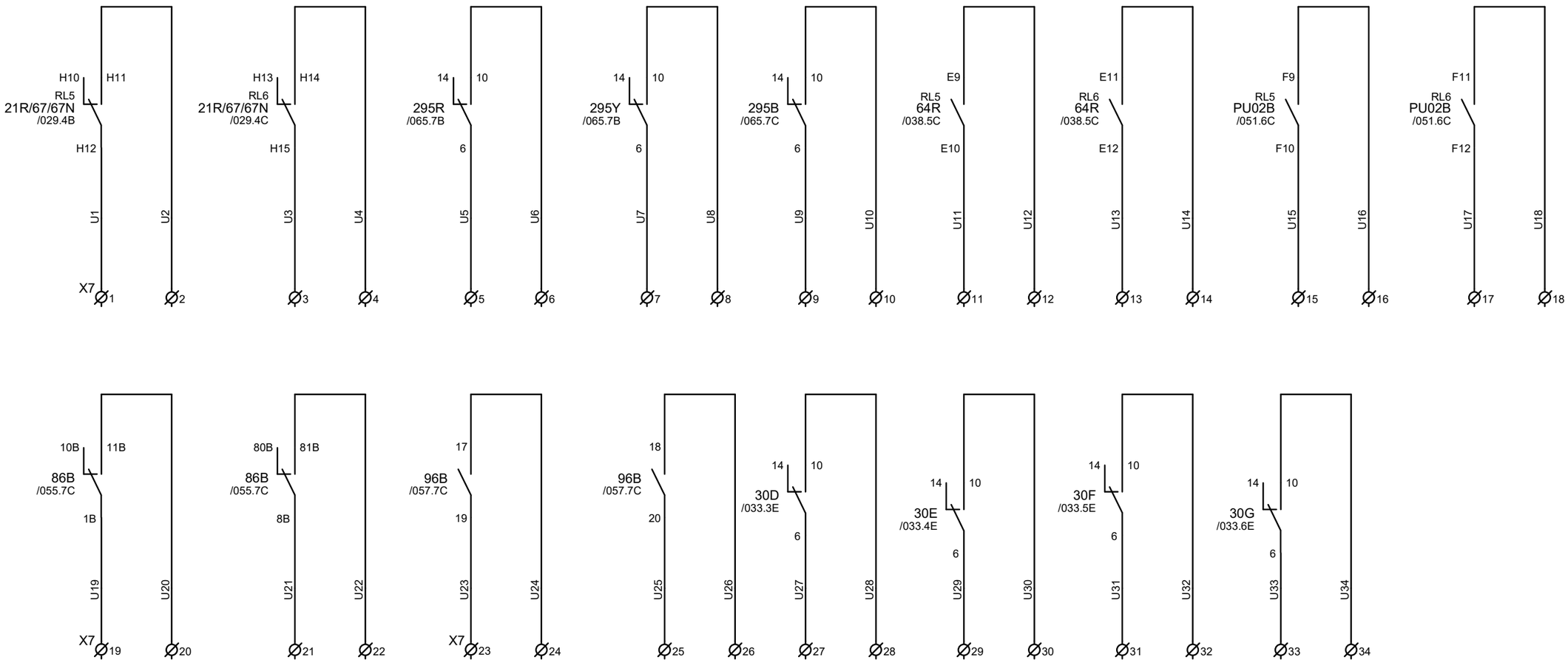

CUSTOMER : JALPURA KHURJA POWER TRANSMISSION LTD. (THE TATA POWER COMPANY LTD.) PROJECT : SUPPLY OF CRP & SAS AT 400/220kV METRO DEPOT GIS	CONTRACTOR : BAJEL PROJECTS LIMITED	Schneider Electric	TITLE : 400kV BUS REACTOR CONTROL & PROTN. PANEL (BAY-402) SPARE CONTACT DISTRIBUTION	PREPARED : BG REVIEWED : BG APPROVED : RKK	REVISION: Z DATE: 21-04-2025	SHT : 095 CONT: 096
PO. No.& Date : 6100001138 DATED: 28.04.2024			PANEL TYPE : +402BRA,+402BRB	DRG. NO.: I1-226736082-S-02		

This document is the exclusive property of Schneider Electric and shall not be used, copied or communicated to third parties without prior authorization.

This document is the exclusive property of Schneider Electric and shall not be used, copied or communicated to third parties without prior authorization.

+402BRA

BLKA		
S1	R1	
S2	R2	
S3	R3	/015.5A
S4	R4	/015.5B
S5	R5	/015.5B
S6	R6	/015.5B
S7	R7	/017.5A
S8	R8	/017.5B
S9	R9	/017.5B
S10	R10	/017.5B

BLKB		
S1	R1	
S2	R2	
S3	R3	/015.5E
S4	R4	/015.5E
S5	R5	/015.5E
S6	R6	/015.5D
S7	R7	
S8	R8	
S9	R9	/018.7B
S10	R10	/018.7C

BLKC		
S1	R1	
S2	R2	
S3	R3	/040.4B
S4	R4	/040.4B
S5	R5	/040.4B
S6	R6	/040.4C
S7	R7	
S8	R8	
S9	R9	
S10	R10	

+402BRB

BLKD		
S1	R1	
S2	R2	
S3	R3	/026.4B
S4	R4	/026.4B
S5	R5	/026.4B
S6	R6	/026.4C
S7	R7	/026.4D
S8	R8	/026.4D
S9	R9	/026.4E
S10	R10	/026.4E

BLKF		
S1	R1	
S2	R2	
S3	R3	/047.4B
S4	R4	/047.4B
S5	R5	/047.4B
S6	R6	/047.4C
S7	R7	
S8	R8	
S9	R9	
S10	R10	

DCSS

DC-1	IND	DC-2		
1			2	/005.4D
3			4	/005.4D
5			6	
7			8	/005.4D
9			10	/005.5D
11			12	/005.6D
13			14	/005.7D
15			16	
17			18	/005.5D
19			20	/005.6D

52CS

TRIP	AT	AC	CLOSE		
1				2	/058.5B
3				4	/058.6B
5				6	
7				8	/084.7C
9				10	/043.2B
11				12	/050.2C
13				14	
15				16	
17				18	/059.3C
19				20	/059.4C
21				22	
23				24	
25				26	
27				28	/084.6C
29				30	
31				32	
33				34	
35				36	
37				38	
39				40	

BLKE		
S1	R1	
S2	R2	
S3	R3	/036.5C
S4	R4	/036.5D
S5	R5	
S6	R6	
S7	R7	
S8	R8	
S9	R9	
S10	R10	

BLKG		
S1	R1	/074.5A
S2	R2	/074.5B
S3	R3	/074.5B
S4	R4	/074.5B
S5	R5	/074.5C
S6	R6	/074.5C
S7	R7	/074.5D
S8	R8	/074.5D
S9	R9	
S10	R10	

CUSTOMER : JALPURA KHURJA POWER TRANSMISSION LTD. (THE TATA POWER COMPANY LTD.) PROJECT : SUPPLY OF CRP & SAS AT 400/220kV METRO DEPOT GIS	CONTRACTOR : BAJEL PROJECTS LIMITED	Schneider Electric	TITLE : 400kV BUS REACTOR CONTROL & PROTN. PANEL (BAY-402) SWITCH CONTACT DISTRIBUTION	PREPARED : BG REVIEWED : BG APPROVED : RKK REVISION: Z DATE: 21-04-2025 SHT : 096 CONT: 097
PO. No.& Date : 6100001138 DATED: 28.04.2024			PANEL TYPE : +402BRA,+402BRB	DRG. NO.: I1-226736082-S-02

+402BRA

TAG	REF	TAG	REF	TAG	REF	TAG	REF	TAG	REF	TAG	REF	TAG	REF	TAG	REF
X1:1	/005.1B	X2:1	/008.4A	X4:1	/019.2C	X5:1	/058.1E	X7:1	/094.1B	XEM4:1	/014.4C	X:ISOL:1	/041.1C	X:NIFPS:1	/093.1E
X1:2	/005.1B	X2:2	/008.4B	X4:2	/019.2C	X5:2	/058.2E	X7:2	/094.1B	XEM4:2	/014.4C	X:ISOL:2	/041.1C	X:NIFPS:2	/093.2E
X1:3	/005.2B	X2:3	/008.4B	X4:3	/019.3C	X5:3	/060.1D	X7:3	/094.2B	XEM4:3	/014.4C	X:ISOL:3	/054.1D	X:NIFPS:3	/093.2E
X1:4	/005.2B	X2:4	/008.4C	X4:4	/019.3D	X5:4	/062.1E	X7:4	/094.2B	XEM4:4	/014.4C	X:ISOL:4	/055.3A	X:NIFPS:4	/093.3E
X1:5	SPARE	X2:5	/008.4A	X4:5	/019.6C	X5:5	/062.2E	X7:5	/094.2B	XEM4:5	/014.5C	X:ISOL:5	/056.2D	X:NIFPS:5	/093.3E
		X2:6	/008.4B	X4:6	/019.6D	X5:6	/062.2E	X7:6	/094.3B	XEM4:6	/014.5C	X:ISOL:6	/057.3A	X:NIFPS:6	/093.4E
		X2:7	/008.4B	X4:7	/019.7D	X5:7	/062.2E	X7:7	/094.3B	XEM4:7	/014.4D	X:ISOL:7	/060.1C	X:NIFPS:7	/093.5E
		X2:8	/008.4C	X4:8	/019.8C	X5:8	/062.3E	X7:8	/094.3B	XEM4:8	/014.4D	X:ISOL:8	SPARE	X:NIFPS:8	/093.5E
		X2:9	/010.5D	X4:9	/019.8D	X5:9	/062.3E	X7:9	/094.4B	XEM4:9	/014.4D	X:ISOL:9	SPARE	X:NIFPS:9	/093.6E
		X2:10	/010.5D	X4:10	/020.5C	X5:10	/062.4E	X7:10	/094.4B	XEM4:10	/014.4D			X:NIFPS:10	/093.6E
		X2:11	/010.5E	X4:11	/020.5C	X5:11	/062.4E	X7:11	/094.4B	XEM4:11	SPARE			X:NIFPS:11	SPARE
		X2:12	/010.5F	X4:12	/020.6C	X5:12	/062.5E	X7:12	/094.5B	XEM4:12	SPARE			X:NIFPS:12	SPARE
		X2:13	/010.5D	X4:13	/020.7C	X5:13	/062.5E	X7:13	/094.5B						
		X2:14	/010.5D	X4:14	/021.2C	X5:14	SPARE	X7:14	/094.5B						
		X2:15	/010.5E	X4:15	/021.2D	X5:15	SPARE	X7:15	/094.6B						
		X2:16	/010.5F	X4:16	/032.3B	X5:16	SPARE	X7:16	/094.6B						
		X2:17	/009.5B	X4:17	/032.3B			X7:17	/094.7B						
		X2:18	/009.5C	X4:18	/032.4B			X7:18	/094.7B						
		X2:19	/009.5C	X4:19	/032.5B			X7:19	/094.7B						
		X2:20	/009.5D	X4:20	/041.2C			X7:20	/094.8B						
		X2:21	/009.5B	X4:21	/041.2C			X7:21	/094.1D						
		X2:22	/009.5C	X4:22	/041.3C			X7:22	/094.1D						
		X2:23	/009.5C	X4:23	/041.4C			X7:23	/094.2D						
		X2:24	/009.5D	X4:24	/041.4C			X7:24	/094.2D						
		X2:25	/015.7A	X4:25	/041.5C			X7:25	/094.2D						
		X2:26	/015.7B	X4:26	/041.6C			X7:26	/094.3D						
		X2:27	/015.7B	X4:27	/041.7D										
		X2:28	/015.7B	X4:28	/041.7D										
		X2:29	/015.3E	X4:29	/041.7D										
		X2:30	/015.3E	X4:30	/042.2C										
		X2:31	/015.3D	X4:31	/042.2C										
		X2:32	/015.3D	X4:32	/042.3C										
		X2:33	/015.3E	X4:33	/042.4C										
		X2:34	/015.3E	X4:34	/042.4C										
		X2:35	/015.3D	X4:35	/042.7D										
		X2:36	/015.3D	X4:36	/042.7D										
		X2:37	/015.7E	X4:37	/042.7D										
		X2:38	/015.7E	X4:38	/043.5C										
		X2:39	/015.7E	X4:39	/043.5D										
		X2:40	/015.7D	X4:40	/043.6D										
		X2:41	/018.3B	X4:41	/043.6C										
		X2:42	/018.3C	X4:42	/043.6D										
		X2:43	/018.3B	X4:43	/054.5C										
		X2:44	/018.3C	X4:44	/054.5C										
		X2:45	/018.6B	X4:45	SPARE										
		X2:46	/040.7A	X4:46	SPARE										
		X2:47	/040.7B	X4:47	SPARE										
		X2:48	/040.7B	X4:48	SPARE										
		X2:49	/040.7C	X4:49	SPARE										
		X2:50	SPARE	X4:50	SPARE										
		X2:51	SPARE	X4:51	SPARE										
		X2:52	SPARE	X4:52	SPARE										
		X2:53	SPARE	X4:53	SPARE										
		X2:54	SPARE												
		X2:55	SPARE												
		X2:56	SPARE												
		X2:57	SPARE												
		X2:58	SPARE												
		X2:59	SPARE												

CUSTOMER : JALPURA KHURJA POWER TRANSMISSION LTD. (THE TATA POWER COMPANY LTD.)

PROJECT : SUPPLY OF CRP & SAS AT 400/220kV METRO DEPOT GIS

PO. No.& Date : 6100001138 DATED: 28.04.2024

CONTRACTOR : BAJEL PROJECTS LIMITED

Schneider Electric

TITLE : 400kV BUS REACTOR CONTROL & PROTN. PANEL (BAY-402) TERMINAL BLOCK ALLOCATION

PANEL TYPE : +402BRA,+402BRB

PREPARED : BG
REVIEWED : BG
APPROVED : RKK

REVISION: Z
DATE: 21-04-2025

SHT : 097
CONT: 098

DRG. NO.: I1-226736082-S-02

This document is the exclusive property of Schneider Electric and shall not be used, copied or communicated to third parties without prior authorization.

+402BRA

TAG	REF	TAG	REF	TAG	REF	TAG	REF	TAG	REF	TAG	REF
X100:1	/103.3B,/013.4E	X101:1	/102.2A,/005.2C	X200:1	I1-226736082-S-04/082.3B	X201:1	I1-226736082-S-04/078.2C,/004.3B	X202A:1	I1-226736082-S-04/079.3C	X202B:1	I1-226736082-S-04/080.3C
X100:2	/103.3B,/013.4E	X101:2	/102.2B,/005.2D	X200:2	I1-226736082-S-04/082.3B	X201:2	I1-226736082-S-04/078.2C,/004.3B	X202A:2	I1-226736082-S-04/079.3D	X202B:2	I1-226736082-S-04/080.3C
X100:3	/103.3B,/013.4E	X101:3	/102.2B,/006.5B	X200:3	I1-226736082-S-04/082.3B			X202A:3	I1-226736082-S-04/079.3D	X202B:3	I1-226736082-S-04/080.3D
X100:4	/103.3B,/013.5E	X101:4	/102.2B,/006.5B	X200:4	I1-226736082-S-04/082.3B			X202A:4	I1-226736082-S-04/079.3D	X202B:4	I1-226736082-S-04/080.3D
X100:5	/103.3B,/014.6A	X101:5	/102.2B,/020.3C	X200:5	I1-226736082-S-04/082.3B			X202A:5	I1-226736082-S-04/079.3D	X202B:5	I1-226736082-S-04/080.3D
X100:6	/103.3C,/014.6B	X101:6	/102.2B,/020.4C	X200:6	I1-226736082-S-04/082.3C			X202A:6	I1-226736082-S-04/079.3D	X202B:6	I1-226736082-S-04/080.3D
X100:7	/103.3C,/014.6B	X101:7	/102.2C,/020.5C	X200:7	I1-226736082-S-04/082.3C			X202A:7	I1-226736082-S-04/079.3E	X202B:7	I1-226736082-S-04/080.3D
X100:8	/103.3C,/014.6B	X101:8	/102.2C,/021.2C	X200:8	I1-226736082-S-04/082.3C			X202A:8	I1-226736082-S-04/079.3E	X202B:8	I1-226736082-S-04/080.3E
X100:9	/103.3C,/017.3A	X101:9	/102.2C,/021.3C	X200:9	I1-226736082-S-04/082.3C			X202A:9	I1-226736082-S-04/079.3E,/041.1C	X202B:9	I1-226736082-S-04/080.3E
X100:10	/103.3C,/017.3B	X101:10	/102.2C,/021.4C	X200:10	I1-226736082-S-04/082.3C			X202A:10	I1-226736082-S-04/079.3E,/041.1C	X202B:10	I1-226736082-S-04/080.3E
X100:11	/103.3D,/017.3B	X101:11	/102.2C,/021.5C	X200:11	I1-226736082-S-04/082.3D						
X100:12	/103.3D,/017.3B	X101:12	/102.2D,/021.5C	X200:12	I1-226736082-S-04/082.3D						
X100:13	/103.3D,/036.3D	X101:13	/102.2D,/021.6C	X200:13	I1-226736082-S-04/082.3D						
X100:14	/103.3D,/036.3E	X101:14	/102.2D,/027.2B	X200:14	I1-226736082-S-04/082.3D						
		X101:15	/102.2D,/027.2B	X200:15	I1-226736082-S-04/082.3D						
		X101:16	/102.2E,/028.2B	X200:16	I1-226736082-S-04/082.3E						
		X101:17	/102.2E,/028.5B								
		X101:18	/102.2E,/037.2B								
		X101:19	/102.2E,/037.2B								
		X101:20	/102.2E,/037.3B								
		X101:21	/102.4A,/037.3B								
		X101:22	/102.4B,/042.5C								
		X101:23	/102.4B,/042.6C								
		X101:24	/102.4B,/043.2C								
		X101:25	/102.4B,/043.3C								
		X101:26	/102.4B,/043.3C								
		X101:27	/102.4C,/043.4C								
		X101:28	/102.4C,/049.4B								
		X101:29	/102.4C,/049.5B								
		X101:30	/102.4C,/050.2B								
		X101:31	/102.4C,/054.1C								
		X101:32	/102.4D,/054.2C								
		X101:33	/102.4D,/054.6C								
		X101:34	/102.4D,/055.2C								
		X101:35	/102.4D,/055.3C								
		X101:36	/102.4E,/056.3C								
		X101:37	/102.4E,/056.5C								
		X101:38	/102.4E,/057.3C								
		X101:39	/102.4E,/058.2D								
		X101:40	/102.4E,/058.2D								
		X101:41	/102.6A,/061.1E								
		X101:42	/102.6B,/061.2E								
		X101:43	/102.6B,/061.2E								
		X101:44	/102.6B,/061.3E								
		X101:45	/102.6B,/063.2D								
		X101:46	/102.6B,/063.3D								
		X101:47	/102.6C,/063.3D								
		X101:48	/102.6C,/063.3D								
		X101:49	/102.6C,/083.4B								
		X101:50	/102.6C,/083.5B								
		X101:51	/102.6C,/083.7B								
		X101:52	/102.6D,/084.2B								
		X101:53	/102.6D,/084.2B								
		X101:54	/102.6D,/085.2B								
		X101:55	/102.6D,/085.4B								
		X101:56	/102.6E,/093.1C								
		X101:57	/102.6E,/093.2C								
		X101:58	/102.6E,/093.3C								
		X101:59	/102.6E,/093.4C								

CUSTOMER : JALPURA KHURJA POWER TRANSMISSION LTD. (THE TATA POWER COMPANY LTD.)
PROJECT : SUPPLY OF CRP & SAS AT 400/220kV METRO DEPOT GIS
PO. No.& Date : 6100001138 DATED: 28.04.2024

CONTRACTOR : BAJEL PROJECTS LIMITED

Schneider Electric

TITLE : 400kV BUS REACTOR CONTROL & PROTN. PANEL (BAY-402) TERMINAL BLOCK ALLOCATION

PANEL TYPE : +402BRA,+402BRB

PREPARED : BG
REVIEWED : BG
APPROVED : RKK
REVISION: Z
DATE: 21-04-2025
SHT : 098
CONT: 099
DRG. NO.: I1-226736082-S-02

This document is the exclusive property of Schneider Electric and shall not be used, copied or communicated to third parties without prior authorization.

+402BRB

TAG	REF	TAG	REF	TAG	REF	TAG	REF	TAG	REF	TAG	REF	TAG	REF	TAG	REF	TAG	REF
X1:1	/005.3B	X2:1	/008.4C	X3:1	/013.6D	X4:1	/027.6C	X5:1	/058.3C	X7:1	/095.1C	X:ISOL:1	/054.2A	X:NIFPS:1	/093.1E	X10:1	/093.7E
X1:2	/005.4B	X2:2	/008.4D	X3:2	/013.7D	X4:2	/027.6C	X5:2	/058.3C	X7:2	/095.1C	X:ISOL:2	/054.2A	X:NIFPS:2	/093.2E	X10:2	/093.8E
X1:3	/005.4B	X2:3	/008.4E	X3:3	SPARE	X4:3	/027.7C	X5:3	/058.4C	X7:3	/095.2C	X:ISOL:3	/048.1C	X:NIFPS:3	/093.2E	X10:3	SPARE
X1:4	/005.5B	X2:4	/008.4E			X4:4	/027.7C	X5:4	/058.5C	X7:4	/095.2C	X:ISOL:4	/048.1C	X:NIFPS:4	/093.3E		
X1:5	SPARE	X2:5	/008.4D			X4:5	/028.6C	X5:5	/058.5C	X7:5	/095.3C	X:ISOL:5	/055.1D	X:NIFPS:5	/093.3E		
		X2:6	/008.4D			X4:6	/028.6D	X5:6	/058.6C	X7:6	/095.3C	X:ISOL:6	/055.2D	X:NIFPS:6	/093.4E		
		X2:7	/008.4E			X4:7	/028.7D	X5:7	/059.3D	X7:7	/095.3C	X:ISOL:7	/056.3A	X:NIFPS:7	/093.5E		
		X2:8	/008.4F			X4:8	/033.2B	X5:8	/059.3D	X7:8	/095.4C	X:ISOL:8	/057.2D	X:NIFPS:8	/093.5E		
		X2:9	/010.5A			X4:9	/033.3B	X5:9	/059.4D	X7:9	/095.4C	X:ISOL:9	/058.4B	X:NIFPS:9	/093.6E		
		X2:10	/010.5B			X4:10	/033.4B	X5:10	/059.4D	X7:10	/095.4C	X:ISOL:10	/058.5B	X:NIFPS:10	/093.6E		
		X2:11	/010.5B			X4:11	/033.5B	X5:11	/061.5B	X7:11	/095.5C	X:ISOL:11	/059.3C	X:NIFPS:11	SPARE		
		X2:12	/010.5C			X4:12	/033.6B	X5:12	/061.5C	X7:12	/095.5C	X:ISOL:12	/059.4C	X:NIFPS:12	SPARE		
		X2:13	/010.5A			X4:13	/037.4C	X5:13	/061.6C	X7:13	/095.6C	X:ISOL:13	/065.1D				
		X2:14	/010.5B			X4:14	/037.4D	X5:14	/061.6C	X7:14	/095.6C	X:ISOL:14	SPARE				
		X2:15	/010.5B			X4:15	/037.5C	X5:15	/064.5B	X7:15	/095.6C	X:ISOL:15	SPARE				
		X2:16	/010.5C			X4:16	/037.5D	X5:16	/064.6C	X7:16	/095.7C	X:ISOL:16	SPARE				
		X2:17	/026.6A			X4:17	/037.6D	X5:17	/064.6C	X7:17	/095.7C						
		X2:18	/026.6B			X4:18	/037.7C	X5:18	/064.6C	X7:18	/095.7C						
		X2:19	/026.6B			X4:19	/037.7D	X5:19	/065.1E	X7:19	/095.1D						
		X2:20	/026.6C			X4:20	/037.7D	X5:20	/065.2E	X7:20	/095.1D						
		X2:21	/036.4A			X4:21	/048.2C	X5:21	/065.2E	X7:21	/095.2D						
		X2:22	/036.4B			X4:22	/048.2C	X5:22	/065.2E	X7:22	/095.2D						
		X2:23	/036.4A			X4:23	/048.3C	X5:23	/065.3E	X7:23	/095.3D						
		X2:24	/036.4B			X4:24	/048.4C	X5:24	/065.3E	X7:24	/095.3D						
		X2:25	/036.8C			X4:25	/048.4C	X5:25	/065.4E	X7:25	/095.4D						
		X2:26	/047.7A			X4:26	/048.5C	X5:26	/065.4E	X7:26	/095.4D						
		X2:27	/047.7B			X4:27	/048.6C	X5:27	/065.5E	X7:27	/095.4D						
		X2:28	/047.7B			X4:28	/048.7D	X5:28	/065.5E	X7:28	/095.4D						
		X2:29	/047.7C			X4:29	/048.7D	X5:29	/065.6E	X7:29	/095.5D						
		X2:30	/074.7A			X4:30	/048.7D	X5:30	/061.5B	X7:30	/095.5D						
		X2:31	/074.7B			X4:31	/049.1C	X5:31	/061.6B	X7:31	/095.6D						
		X2:32	/074.7B			X4:32	/049.2C	X5:32	/061.6B	X7:32	/095.6D						
		X2:33	/074.7B			X4:33	/049.2C	X5:33	/064.6B	X7:33	/095.6D						
		X2:34	SPARE			X4:34	/049.3C	X5:34	/064.6B	X7:34	/095.7D						
		X2:35	SPARE			X4:35	/049.4C	X5:35	/064.6B								
		X2:36	SPARE			X4:36	/049.7C	X5:36	SPARE								
		X2:37	SPARE			X4:37	/049.6D	X5:37	SPARE								
		X2:38	SPARE			X4:38	/049.7D	X5:38	SPARE								
		X2:39	SPARE			X4:39	/050.5C	X5:39	SPARE								
		X2:40	SPARE			X4:40	/050.5D	X5:40	SPARE								
						X4:41	/050.6D	X5:41	SPARE								
						X4:42	/050.6C	X5:42	SPARE								
						X4:43	/050.6D										
						X4:44	/055.5C										
						X4:45	/055.5C										
						X4:46	SPARE										
						X4:47	SPARE										
						X4:48	SPARE										
						X4:49	SPARE										
						X4:50	SPARE										
						X4:51	SPARE										
						X4:52	SPARE										
						X4:53	SPARE										
						X4:54	SPARE										

CUSTOMER : JALPURA KHURJA POWER TRANSMISSION LTD. (THE TATA POWER COMPANY LTD.)
PROJECT : SUPPLY OF CRP & SAS AT 400/220kV METRO DEPOT GIS

PO. No.& Date : 6100001138 DATED: 28.04.2024

CONTRACTOR : BAJEL PROJECTS LIMITED

Schneider Electric

TITLE : 400kV BUS REACTOR CONTROL & PROTN. PANEL (BAY-402) TERMINAL BLOCK ALLOCATION

PANEL TYPE : +402BRA,+402BRB

PREPARED : BG
REVIEWED : BG
APPROVED : RKK
REVISION: Z
DATE: 21-04-2025
SHT :099
CONT: 100

DRG. NO.: I1-226736082-S-02

This document is the exclusive property of Schneider Electric and shall not be used, copied or communicated to third parties without prior authorization.

+402BRB

TAG	REF	TAG	REF	TAG	REF	TAG	REF	TAG	REF	TAG	REF	TAG	REF
X-BCU-PS-A:1	/073.7D	X-BCU-DIU-P:1	/075.4D	X-BCU-DIU-O:1	/077.4D	X-BCU-DIU-N:1	/079.4D	X-BCU-DIU-M:1	/081.4D	X-BCU-DIU-L:1	/083.4D	X-BCU-DIU-K:1	/085.4D
X-BCU-PS-A:2	/073.7D	X-BCU-DIU-P:2	/075.7D	X-BCU-DIU-O:2	/077.8D	X-BCU-DIU-N:2	/079.7D	X-BCU-DIU-M:2	/081.7D	X-BCU-DIU-L:2	/083.7D	X-BCU-DIU-K:2	/085.7D
X-BCU-PS-A:3	/073.2D	X-BCU-DIU-P:3	/076.4D	X-BCU-DIU-O:3	/078.4D	X-BCU-DIU-N:3	/080.4D	X-BCU-DIU-M:3	/082.4D	X-BCU-DIU-L:3	/084.4D	X-BCU-DIU-K:3	/086.4D
X-BCU-PS-A:4	/073.3D	X-BCU-DIU-P:4	/076.7D	X-BCU-DIU-O:4	/078.7D	X-BCU-DIU-N:4	/080.7D	X-BCU-DIU-M:4	/082.7D	X-BCU-DIU-L:4	/084.7D	X-BCU-DIU-K:4	/086.7D
X-BCU-PS-A:5	SPARE	X-BCU-DIU-P:5	/075.2D	X-BCU-DIU-O:5	/077.2D	X-BCU-DIU-N:5	/079.2D	X-BCU-DIU-M:5	/081.2D	X-BCU-DIU-L:5	/083.2D	X-BCU-DIU-K:5	/085.2D
		X-BCU-DIU-P:6	/075.2D	X-BCU-DIU-O:6	/077.3D	X-BCU-DIU-N:6	/079.2D	X-BCU-DIU-M:6	/081.2D	X-BCU-DIU-L:6	/083.2D	X-BCU-DIU-K:6	/085.3D
		X-BCU-DIU-P:7	/075.3D	X-BCU-DIU-O:7	/077.3D	X-BCU-DIU-N:7	/079.3D	X-BCU-DIU-M:7	/081.3D	X-BCU-DIU-L:7	/083.3D	X-BCU-DIU-K:7	/085.5D
		X-BCU-DIU-P:8	/075.4D	X-BCU-DIU-O:8	/077.4D	X-BCU-DIU-N:8	/079.4D	X-BCU-DIU-M:8	/081.4D	X-BCU-DIU-L:8	/083.4D	X-BCU-DIU-K:8	/085.6D
		X-BCU-DIU-P:9	/075.5D	X-BCU-DIU-O:9	/077.5D	X-BCU-DIU-N:9	/079.5D	X-BCU-DIU-M:9	/081.5D	X-BCU-DIU-L:9	/083.1C	X-BCU-DIU-K:9	/085.7D
		X-BCU-DIU-P:10	/075.5D	X-BCU-DIU-O:10	/077.6D	X-BCU-DIU-N:10	/079.5D	X-BCU-DIU-M:10	/081.5D	X-BCU-DIU-L:10	/084.3C	X-BCU-DIU-K:10	/086.2D
		X-BCU-DIU-P:11	/075.6D	X-BCU-DIU-O:11	/077.7D	X-BCU-DIU-N:11	/079.6D	X-BCU-DIU-M:11	/081.6D			X-BCU-DIU-K:11	/086.2D
		X-BCU-DIU-P:12	/075.7D	X-BCU-DIU-O:12	/077.7D	X-BCU-DIU-N:12	/079.7D	X-BCU-DIU-M:12	/081.7D			X-BCU-DIU-K:12	/086.3D
		X-BCU-DIU-P:13	/076.2D	X-BCU-DIU-O:13	/078.2D	X-BCU-DIU-N:13	/080.2D	X-BCU-DIU-M:13	/082.2D			X-BCU-DIU-K:13	/086.4D
		X-BCU-DIU-P:14	/076.2D	X-BCU-DIU-O:14	/078.2D	X-BCU-DIU-N:14	/080.2D	X-BCU-DIU-M:14	/082.2D			X-BCU-DIU-K:14	/086.5D
		X-BCU-DIU-P:15	/076.3D	X-BCU-DIU-O:15	/078.3D	X-BCU-DIU-N:15	/080.3D	X-BCU-DIU-M:15	/082.3D			X-BCU-DIU-K:15	/086.5D
		X-BCU-DIU-P:16	/076.4D	X-BCU-DIU-O:16	/078.4D	X-BCU-DIU-N:16	/080.4D	X-BCU-DIU-M:16	/082.4D			X-BCU-DIU-K:16	/086.6D
		X-BCU-DIU-P:17	/076.5D	X-BCU-DIU-O:17	/078.5D	X-BCU-DIU-N:17	/080.5D	X-BCU-DIU-M:17	/082.5D			X-BCU-DIU-K:17	/086.7D
		X-BCU-DIU-P:18	/076.5D	X-BCU-DIU-O:18	/078.5D	X-BCU-DIU-N:18	/080.5D	X-BCU-DIU-M:18	/082.5D			X-BCU-DIU-K:18	/085.2C
		X-BCU-DIU-P:19	/076.6D	X-BCU-DIU-O:19	/078.6D	X-BCU-DIU-N:19	/080.6D	X-BCU-DIU-M:19	/082.6D			X-BCU-DIU-K:19	/085.6C
		X-BCU-DIU-P:20	/076.7D	X-BCU-DIU-O:20	/078.7D	X-BCU-DIU-N:20	/080.7D	X-BCU-DIU-M:20	/082.7D			X-BCU-DIU-K:20	/086.2C
		X-BCU-DIU-P:21	/075.1C	X-BCU-DIU-O:21	/078.4C	X-BCU-DIU-N:21	/079.1C					X-BCU-DIU-K:21	/086.5C
		X-BCU-DIU-P:22	/075.2C	X-BCU-DIU-O:22	/078.5C	X-BCU-DIU-N:22	/080.1C						
		X-BCU-DIU-P:23	/075.2C										

TAG	REF	TAG	REF	TAG	REF	TAG	REF	TAG	REF	TAG	REF
X-BCU-AIU-D:1	/092.3D	X-BCU-DOU-E:1	/087.1B	X-BCU-DOU-F:1	/088.1B	X-BCU-DOU-G:1	/089.1C	X-BCU-DOU-H:1	/090.3C	X-BCU-DOU-I:1	/091.3C
X-BCU-AIU-D:2	/092.3D	X-BCU-DOU-E:2	/087.2B	X-BCU-DOU-F:2	/088.2B	X-BCU-DOU-G:2	/089.2C	X-BCU-DOU-H:2	/090.5C	X-BCU-DOU-I:2	/091.4C
X-BCU-AIU-D:3	/092.4D	X-BCU-DOU-E:3	/087.2B	X-BCU-DOU-F:3	/088.2B	X-BCU-DOU-G:3	/089.2C	X-BCU-DOU-H:3	/090.5C	X-BCU-DOU-I:3	/091.5C
X-BCU-AIU-D:4	/092.4D	X-BCU-DOU-E:4	/087.2B	X-BCU-DOU-F:4	/088.3B	X-BCU-DOU-G:4	/089.3C	X-BCU-DOU-H:4	/090.5C	X-BCU-DOU-I:4	/091.6C
X-BCU-AIU-D:5	/092.5D	X-BCU-DOU-E:5	/087.3B	X-BCU-DOU-F:5	/088.3B	X-BCU-DOU-G:5	/089.3C	X-BCU-DOU-H:5	/090.7C	X-BCU-DOU-I:5	/091.6C
X-BCU-AIU-D:6	/092.5D	X-BCU-DOU-E:6	/087.3B	X-BCU-DOU-F:6	/088.3B	X-BCU-DOU-G:6	/089.3C	X-BCU-DOU-H:6	/090.7B	X-BCU-DOU-I:6	/091.6C
X-BCU-AIU-D:7	/092.6D	X-BCU-DOU-E:7	/087.3B	X-BCU-DOU-F:7	/088.4B	X-BCU-DOU-G:7	/089.4C	X-BCU-DOU-H:7	/090.8B	X-BCU-DOU-I:7	/091.7C
X-BCU-AIU-D:8	/092.7D	X-BCU-DOU-E:8	/087.4B	X-BCU-DOU-F:8	/088.4B	X-BCU-DOU-G:8	/089.4C	X-BCU-DOU-H:8	/090.8B	X-BCU-DOU-I:8	/091.7C
X-BCU-AIU-D:9	/092.2D	X-BCU-DOU-E:9	/087.4B	X-BCU-DOU-F:9	/088.5B	X-BCU-DOU-G:9	/089.5C	X-BCU-DOU-H:9	SPARE	X-BCU-DOU-I:9	/091.7C
X-BCU-AIU-D:10	/092.2D	X-BCU-DOU-E:10	/087.4B	X-BCU-DOU-F:10	/088.5B	X-BCU-DOU-G:10	/089.5C	X-BCU-DOU-H:10	SPARE	X-BCU-DOU-I:10	/091.7C
X-BCU-AIU-D:11	/092.3D	X-BCU-DOU-E:11	/087.5B	X-BCU-DOU-F:11	/088.5B	X-BCU-DOU-G:11	/089.5C			X-BCU-DOU-I:11	/091.8C
X-BCU-AIU-D:12	/092.4D	X-BCU-DOU-E:12	/087.5B	X-BCU-DOU-F:12	/088.6B	X-BCU-DOU-G:12	/089.6C			X-BCU-DOU-I:12	/091.8C
X-BCU-AIU-D:13	/092.5D	X-BCU-DOU-E:13	/087.6B	X-BCU-DOU-F:13	/088.6B	X-BCU-DOU-G:13	/089.7C			X-BCU-DOU-I:13	SPARE
X-BCU-AIU-D:14	/092.5D	X-BCU-DOU-E:14	/087.6B	X-BCU-DOU-F:14	/088.7B	X-BCU-DOU-G:14	/089.8C			X-BCU-DOU-I:14	SPARE
X-BCU-AIU-D:15	/092.6D	X-BCU-DOU-E:15	/087.6B	X-BCU-DOU-F:15	/088.7B	X-BCU-DOU-G:15	/089.8C				
X-BCU-AIU-D:16	/092.6D	X-BCU-DOU-E:16	/087.7B	X-BCU-DOU-F:16	/088.7B	X-BCU-DOU-G:16	SPARE				
X-BCU-AIU-D:S1	/092.3D	X-BCU-DOU-E:17	/087.7B	X-BCU-DOU-F:17	/088.8B	X-BCU-DOU-G:17	SPARE				
X-BCU-AIU-D:S2	/092.4D	X-BCU-DOU-E:18	/087.7B	X-BCU-DOU-F:18	/088.8B						
X-BCU-AIU-D:S3	/092.5D	X-BCU-DOU-E:19	/087.7B	X-BCU-DOU-F:19	SPARE						
X-BCU-AIU-D:S4	/092.7D	X-BCU-DOU-E:20	/087.8B	X-BCU-DOU-F:20	SPARE						
X-BCU-AIU-D:S5	/092.3D	X-BCU-DOU-E:21	/087.8B								
X-BCU-AIU-D:S6	/092.4D	X-BCU-DOU-E:22	SPARE								
X-BCU-AIU-D:S7	/092.6D	X-BCU-DOU-E:23	SPARE								
X-BCU-AIU-D:S8	/092.7D										

This document is the exclusive property of Schneider Electric and shall not be used, copied or communicated to third parties without prior authorization.

CUSTOMER : JALPURA KHURJA POWER TRANSMISSION LTD. (THE TATA POWER COMPANY LTD.)
PROJECT : SUPPLY OF CRP & SAS AT 400/220kV METRO DEPOT GIS
PO. No.& Date : 6100001138 DATED: 28.04.2024

CONTRACTOR : BAJEL PROJECTS LIMITED

Schneider Electric

TITLE : 400kV BUS REACTOR CONTROL & PROTN. PANEL (BAY-402) TERMINAL BLOCK ALLOCATION
PANEL TYPE : +402BRA,+402BRB

PREPARED : BG
REVIEWED : BG
APPROVED : RKK
REVISION: Z
DATE: 21-04-2025
SHT : 100
CONT: 101
DRG. NO.: I1-226736082-S-02

+402BRB

TAG	REF	TAG	REF	TAG	REF	TAG	REF	TAG	REF	TAG	REF
X100:1	/103.4B,/013.4E	X101:1	/102.3A,/005.3C	X200:1	I1-226736082-S-04/082.4B,/011.4D	X201:1	I1-226736082-S-04/078.3C,/004.5B	X202B:1	I1-226736082-S-04/080.4C	X203A:1	I1-226736082-S-04/077.2B,/073.3C
X100:2	/103.4B,/013.4E	X101:2	/102.3B,/005.3D	X200:2	I1-226736082-S-04/082.4B,/011.4D	X201:2	I1-226736082-S-04/078.3C,/004.5B	X202B:2	I1-226736082-S-04/080.4C	X203A:2	I1-226736082-S-04/077.2B,/073.2C
X100:3	/103.4B,/013.4E	X101:3	/102.3B,/006.4B	X200:3	I1-226736082-S-04/082.4B,/011.4D			X202B:3	I1-226736082-S-04/080.4D	X203A:3	I1-226736082-S-04/077.2B,/075.1C
X100:4	/103.4B,/013.5E	X101:4	/102.3B,/006.4B	X200:4	I1-226736082-S-04/082.4B,/011.5D			X202B:4	I1-226736082-S-04/080.4D	X203A:4	I1-226736082-S-04/077.2B,/075.2C
X100:5	/103.4B,/014.7A	X101:5	/102.3B,/020.3B	X200:5	I1-226736082-S-04/082.4B,/012.4C			X202B:5	I1-226736082-S-04/080.4D		
X100:6	/103.4C,/014.7B	X101:6	/102.3B,/020.4B	X200:6	I1-226736082-S-04/082.4C,/012.5C			X202B:6	I1-226736082-S-04/080.4D		
X100:7	/103.4C,/014.7B	X101:7	/102.3C,/020.5B	X200:7	I1-226736082-S-04/082.4C,/012.5D			X202B:7	I1-226736082-S-04/080.4D		
X100:8	/103.4C,/014.7B	X101:8	/102.3C,/021.2B	X200:8	I1-226736082-S-04/082.4C,/012.5D			X202B:8	I1-226736082-S-04/080.4E		
X100:9	/103.4C,/017.2A	X101:9	/102.3C,/021.3B	X200:9	I1-226736082-S-04/082.4C,/011.4A			X202B:9	I1-226736082-S-04/080.4E,/048.1C		
X100:10	/103.4C,/017.2B	X101:10	/102.3C,/021.4B	X200:10	I1-226736082-S-04/082.4C,/011.4B			X202B:10	I1-226736082-S-04/080.4E,/048.1C		
X100:11	/103.4D,/017.2B	X101:11	/102.3C,/021.5B	X200:11	I1-226736082-S-04/082.4D,/011.4B						
X100:12	/103.4D,/017.2B	X101:12	/102.3D,/021.5B	X200:12	I1-226736082-S-04/082.4D,/011.5B						
X100:13	/103.4D,/036.4D	X101:13	/102.3D,/021.6B	X200:13	I1-226736082-S-04/082.4D,/012.4A						
X100:14	/103.4D,/036.4E	X101:14	/102.3D,/027.2C	X200:14	I1-226736082-S-04/082.4D,/012.5A						
		X101:15	/102.3D,/027.2C	X200:15	I1-226736082-S-04/082.4D,/012.5A						
		X101:16	/102.3E,/028.2C	X200:16	I1-226736082-S-04/082.4E,/012.5B						
		X101:17	/102.3E,/028.5C								
		X101:18	/102.3E,/037.2C								
		X101:19	/102.3E,/037.2C								
		X101:20	/102.3E,/037.3C								
		X101:21	/102.5A,/037.3C								
		X101:22	/102.5B,/042.5B								
		X101:23	/102.5B,/042.6B								
		X101:24	/102.5B,/043.2B								
		X101:25	/102.5B,/043.3B								
		X101:26	/102.5B,/043.3B								
		X101:27	/102.5C,/043.4B								
		X101:28	/102.5C,/049.4C								
		X101:29	/102.5C,/049.5C								
		X101:30	/102.5C,/050.2C								
		X101:31	/102.5C,/054.1C								
		X101:32	/102.5D,/054.2C								
		X101:33	/102.5D,/054.6C								
		X101:34	/102.5D,/055.2C								
		X101:35	/102.5D,/055.3C								
		X101:36	/102.5E,/056.3C								
		X101:37	/102.5E,/056.5C								
		X101:38	/102.5E,/057.3C								
		X101:39	/102.5E,/058.2C								
		X101:40	/102.5E,/058.2C								
		X101:41	/102.7A,/061.1D								
		X101:42	/102.7B,/061.2D								
		X101:43	/102.7B,/061.2D								
		X101:44	/102.7B,/061.3D								
		X101:45	/102.7B,/063.2D								
		X101:46	/102.7B,/063.3D								
		X101:47	/102.7C,/063.3D								
		X101:48	/102.7C,/063.3D								
		X101:49	/102.7C,/083.4C								
		X101:50	/102.7C,/083.5C								
		X101:51	/102.7C,/083.7C								
		X101:52	/102.7D,/084.2C								
		X101:53	/102.7D,/084.2C								
		X101:54	/102.7D,/085.2C								
		X101:55	/102.7D,/085.4C								
		X101:56	/102.7E,/093.1B								
		X101:57	/102.7E,/093.2B								
		X101:58	/102.7E,/093.3B								
		X101:59	/102.7E,/093.4B								

This document is the exclusive property of Schneider Electric and shall not be used, copied or communicated to third parties without prior authorization.

CUSTOMER : JALPURA KHURJA POWER TRANSMISSION LTD. (THE TATA POWER COMPANY LTD.)

PROJECT : SUPPLY OF CRP & SAS AT 400/220kV METRO DEPOT GIS

PO. No.& Date : 6100001138 DATED: 28.04.2024

CONTRACTOR : BAJEL PROJECTS LIMITED

Schneider Electric

TITLE : 400kV BUS REACTOR CONTROL & PROTN. PANEL (BAY-402) TERMINAL BLOCK ALLOCATION

PANEL TYPE : +402BRA,+402BRB

PREPARED : BG
REVIEWED : BG
APPROVED : RKK

REVISION: Z
DATE: 21-04-2025

SHT : 101
CONT: NIL

DRG. NO.: I1-226736082-S-02

This document is the exclusive property of Schneider Electric and shall not be used, copied or communicated to third parties without prior authorization.

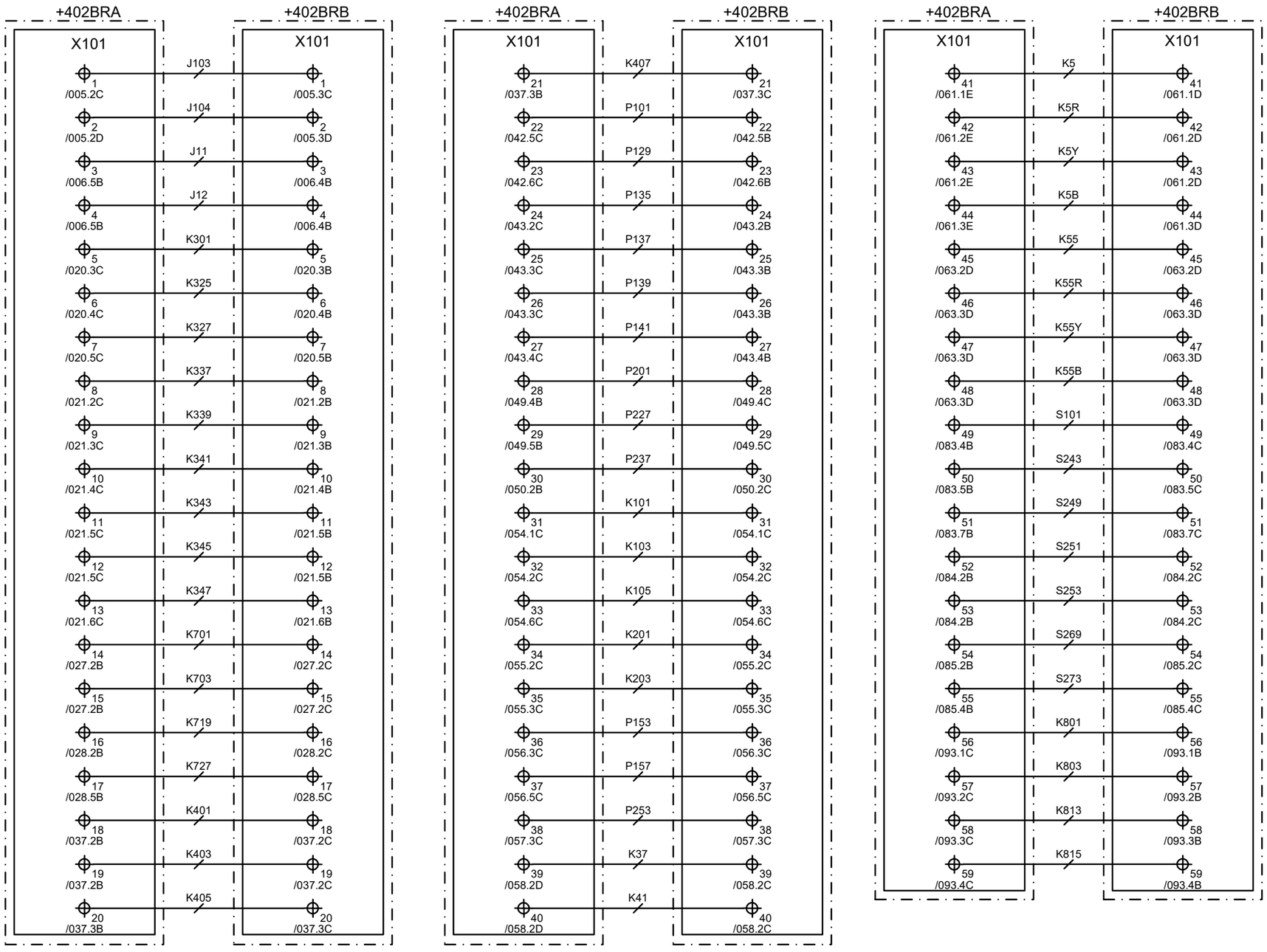

CUSTOMER : JALPURA KHURJA POWER TRANSMISSION LTD. **PROJECT : SUPPLY OF CRP & SAS AT 400/220kV METRO DEPOT GIS** **PO No & Date : 6100001138 DATED: 28.04.2024**	**CONTRACTOR : BAJEL PROJECTS LIMITED**	Schneider Electric	**TITLE : 400kV BUS REACTOR CONTROL & PROTN. PANEL (BAY-402) BUS WIRING - INTRA-PANEL** **PANEL TYPE : +402BRA,+402BRB**	PREPARED : BG REVIEWED : BG APPROVED : RKK **DRG. NO.: I1-226736082-S-02**	REVISION: Z DATE: 21-04-2025	SHT :102 CONT: 074

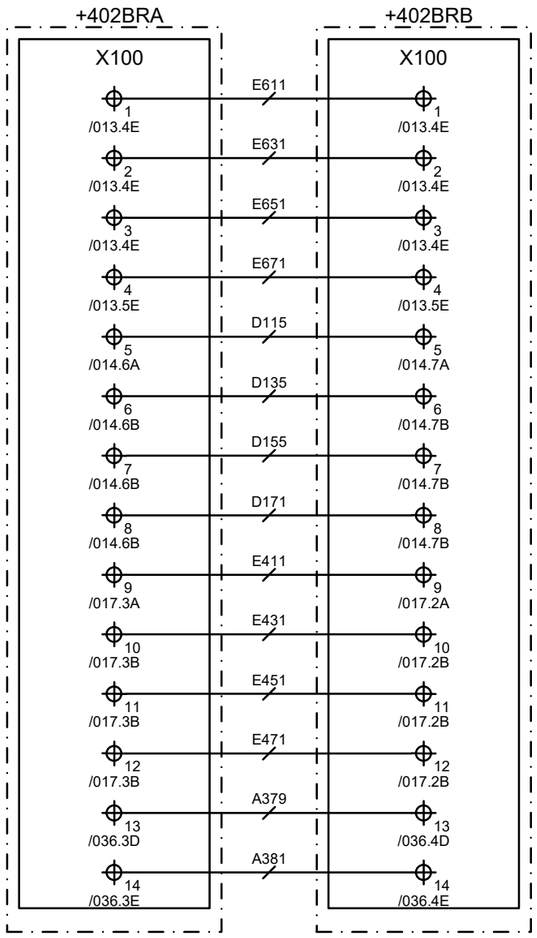

This document is the exclusive property of Schneider Electric and shall not be used, copied or communicated to third parties without prior authorization.

CUSTOMER : JALPURA KHURJA POWER TRANSMISSION LTD. PROJECT : SUPPLY OF CRP & SAS AT 400/220kV METRO DEPOT GIS	CONTRACTOR : BAJEL PROJECTS LIMITED	Schneider Electric	TITLE : 400kV BUS REACTOR CONTROL & PROTN. PANEL (BAY-402) BUS WIRING - INTRA-PANEL	PREPARED : BG REVIEWED : BG APPROVED : RKK	REVISION: Z DATE: 21-04-2025	SHT :103 CONT:074
PO No & Date : 6100001138 DATED: 28.04.2024			PANEL TYPE : +402BRA,+402BRB	DRG. NO.: I1-226736082-S-02		